EXPLODED VIEW (CD MECHANISM)

AA		: N09-5488-05
AB		: N09-5544-08
AC		: N09-5545-08
AD	ϕ2x2.5	: N39-2025-46
AE	M2x3	: N35-2003-46
AF	ϕ2x6	: N83-2006-46

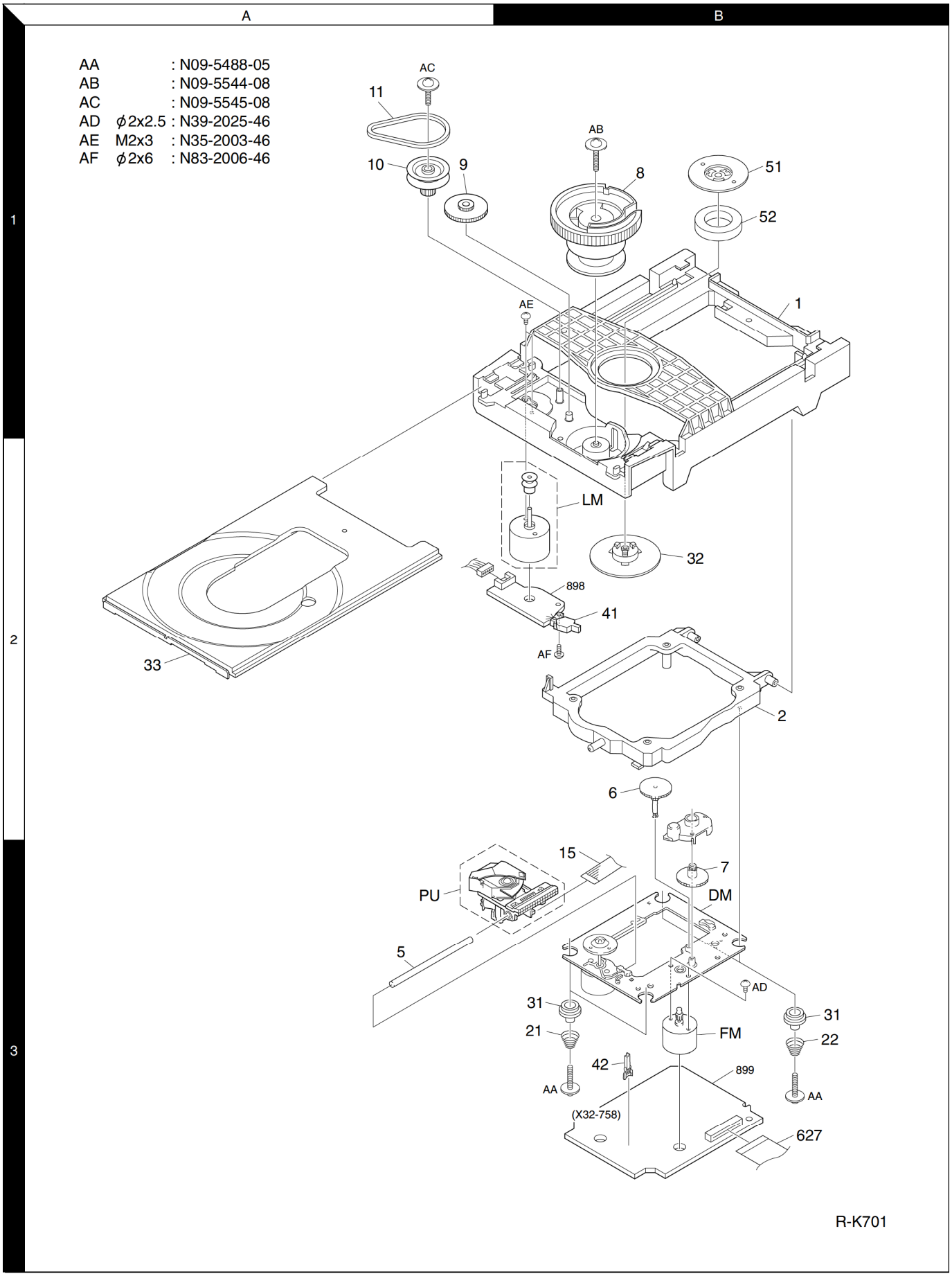

Parts with exploded numbers larger than 700 are not supplied.