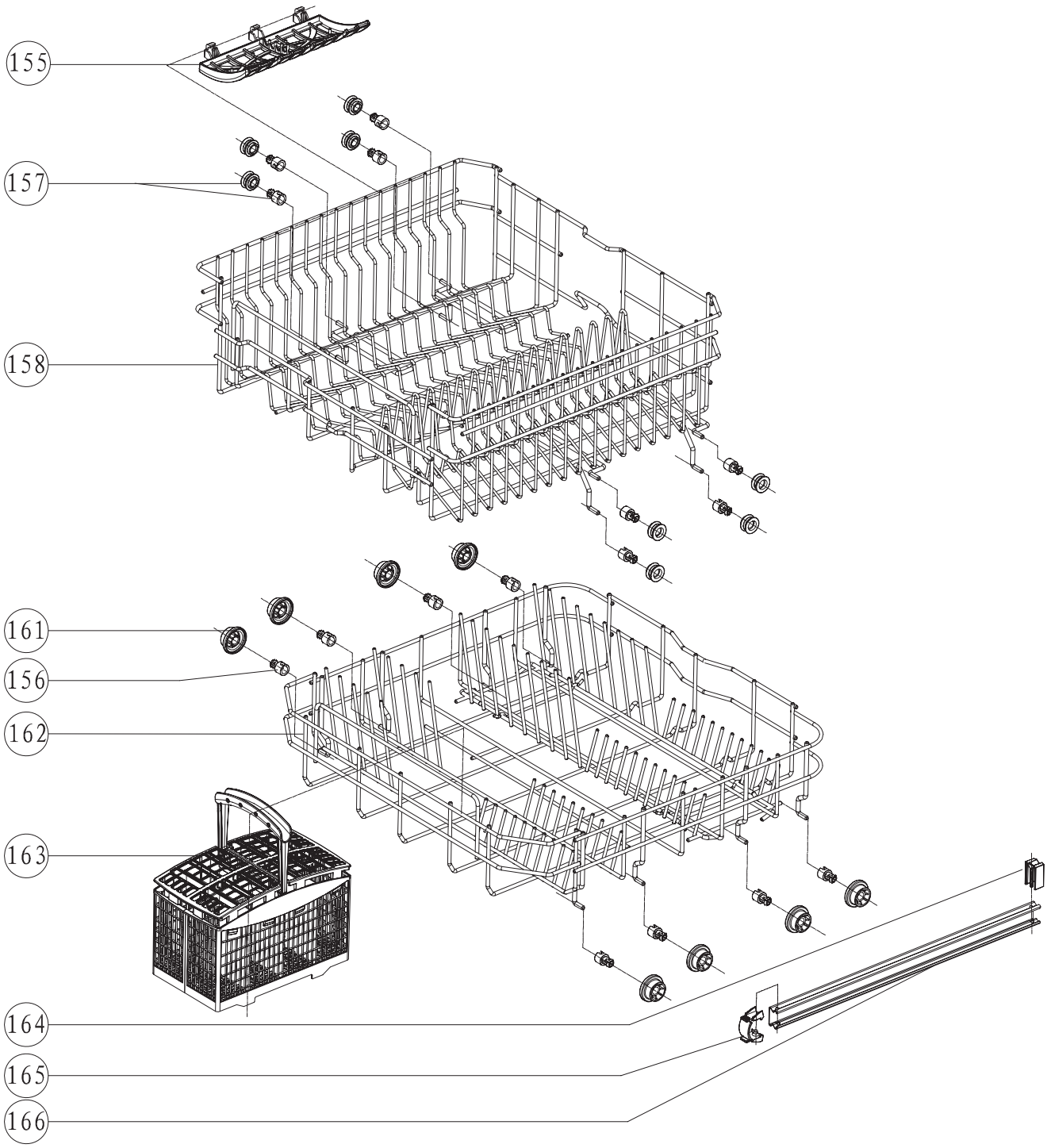

Owned by an entity of FAGOR GROUP / Copy prohibided

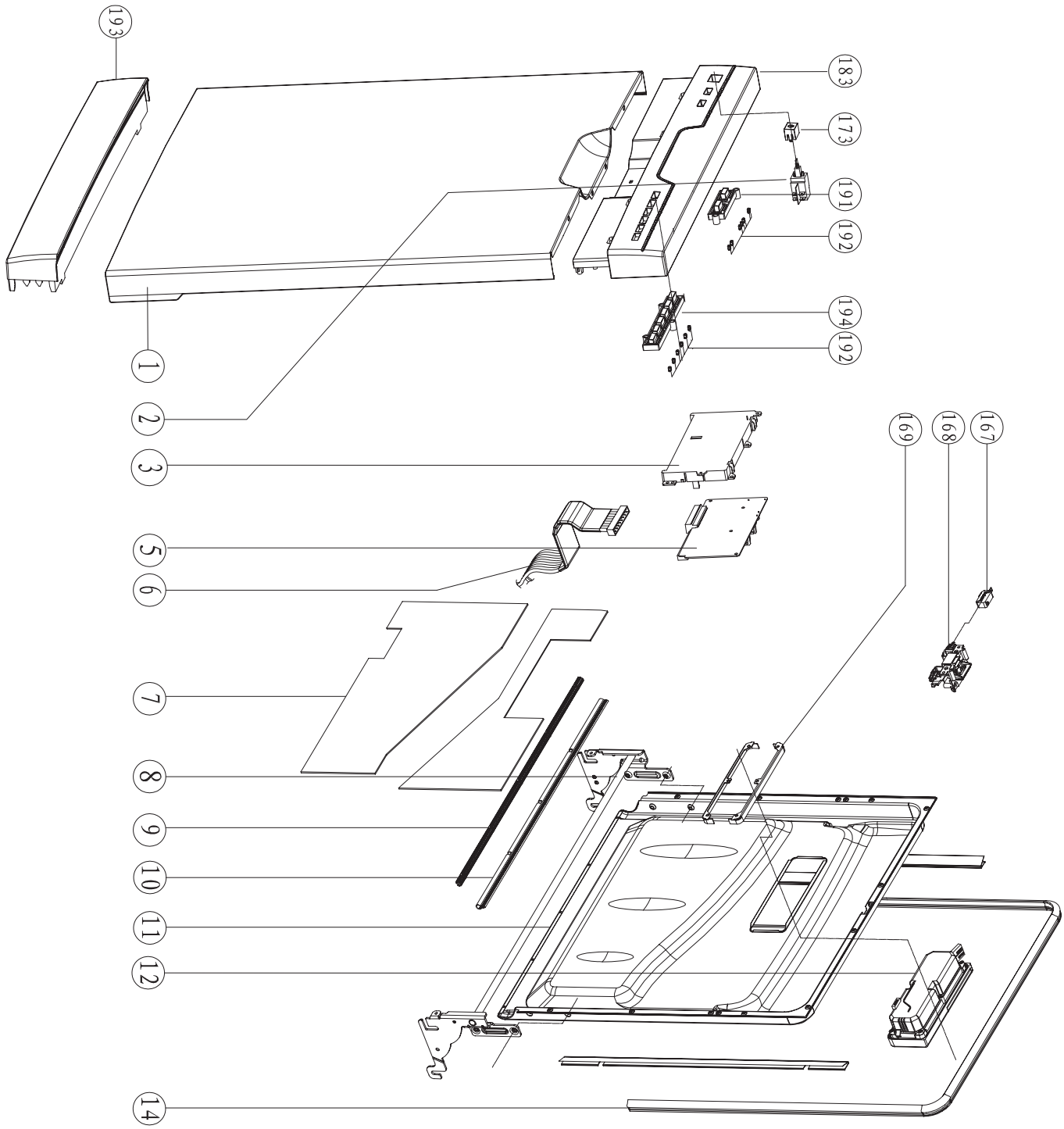

Owned by an entity of FAGOR GROUP / Copy prohibided

Nº 25106

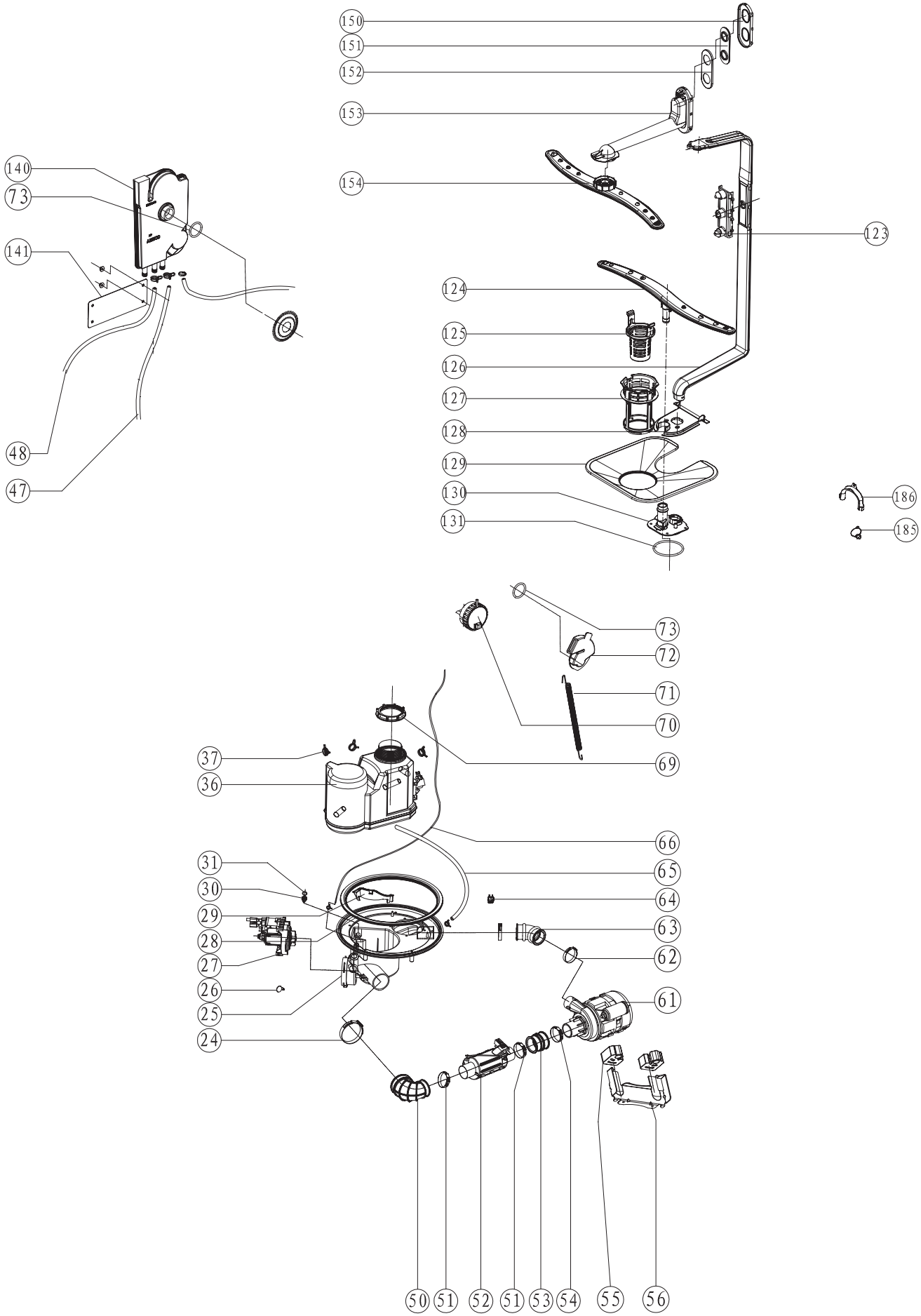

Owned by an entity of FAGOR GROUP / Copy prohibided

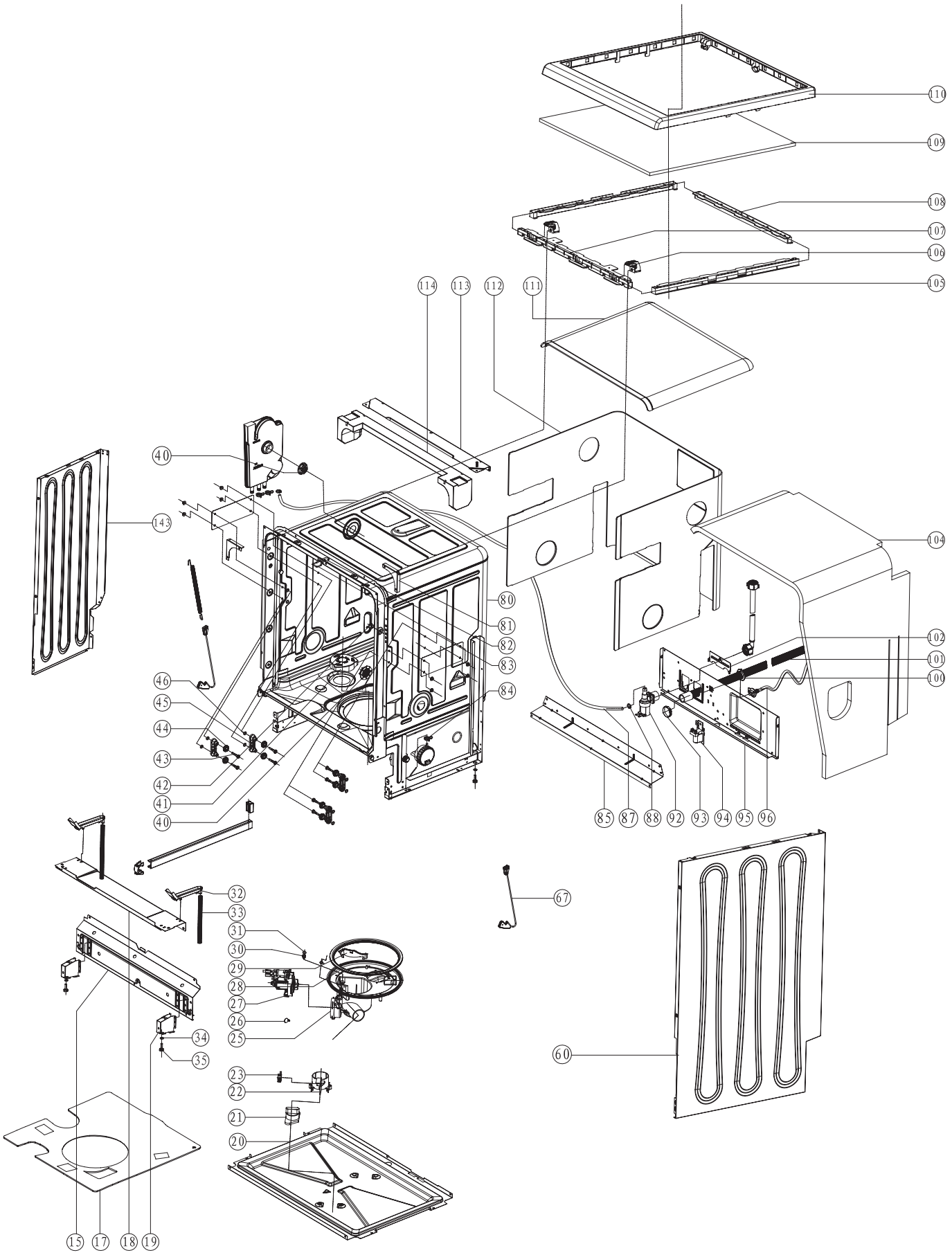

Owned by an entity of FAGOR GROUP / Copy prohibided

Nº 25118