SAMSUNG ELECTRONICS

CTN263EA01/XEF
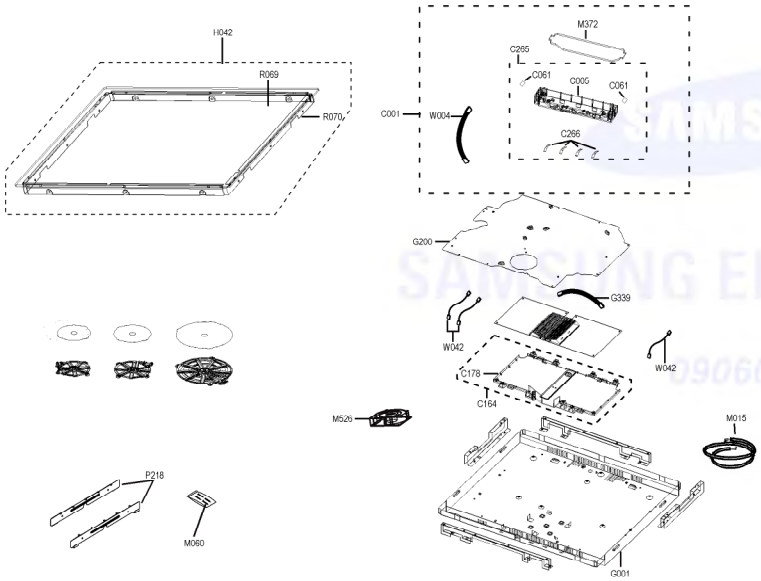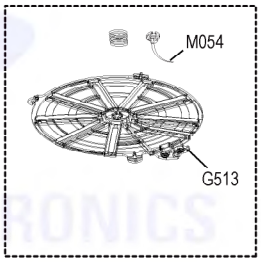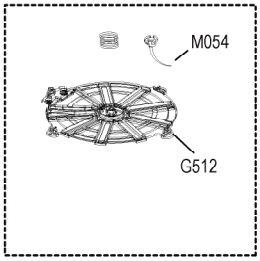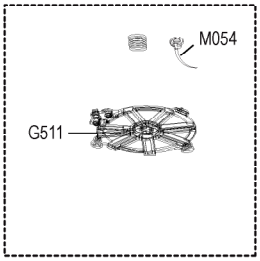
Electronic ovne - Exploded Views | MAIN PARTS | ASSY-WORKING COIL