termal®	**SUBJECT :** KONU :	TR / RO 389 ASWO code:6429269 CIRCUIT DIAGRAM	**PRODUCT CODE :** MAMUL KODU : 003 31 11 89

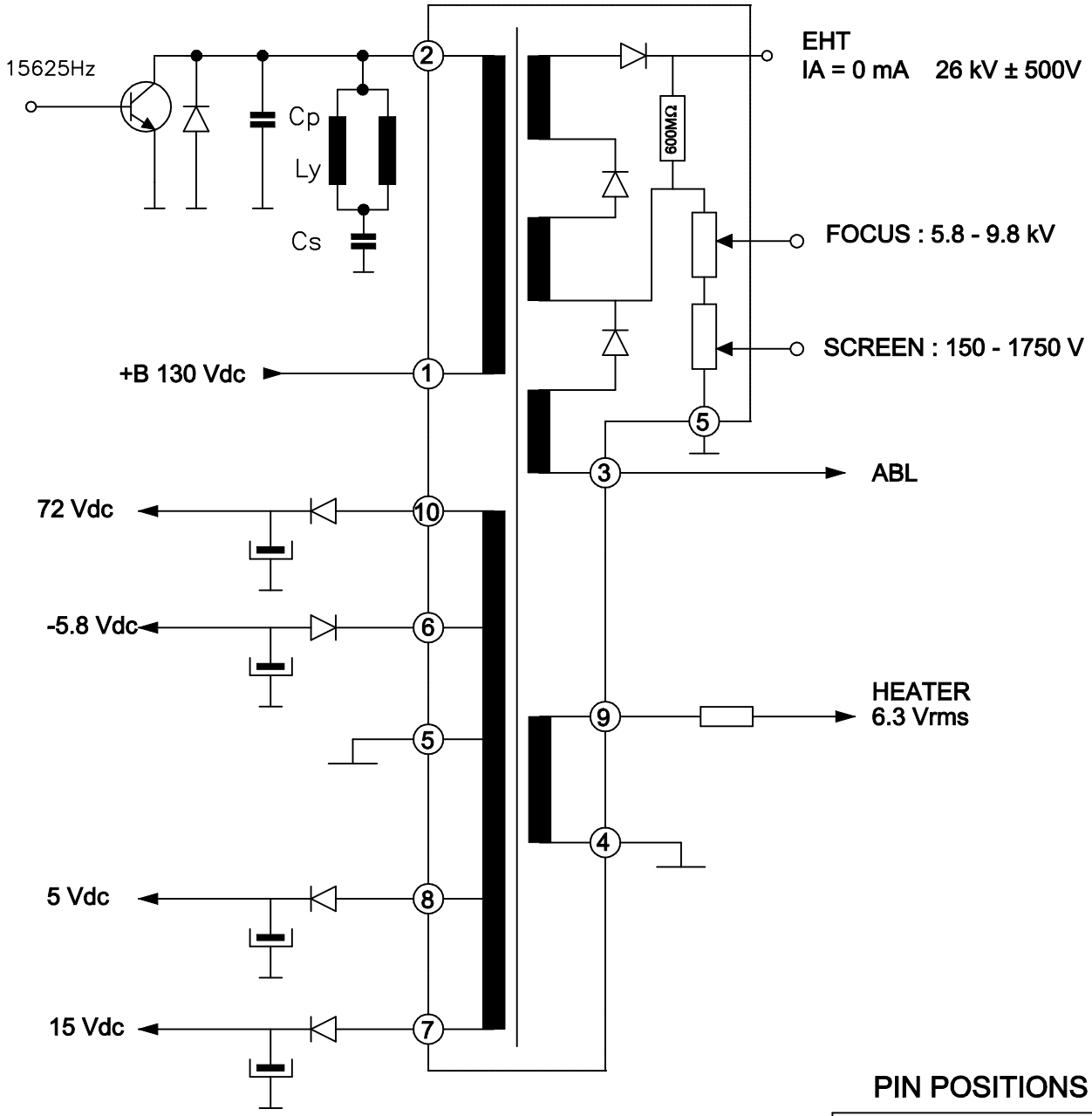

PIN POSITIONS

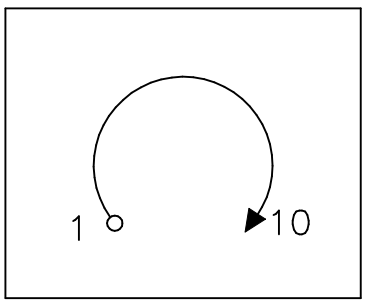

BOTTOM VIEW

TERMAL ELECTRONICS CO.
Kartaltepe Mh.Yalcin Sk. No: 54
34295 Sefakoy - Istanbul - TURKEY

Tel: +90 212 598 95 00 / Fax: +90 212 541 53 23 - 579 16 80
E-mail: info@termal.com / Web site: www.termal.com