SECTION 4
EXPLODED VIEWS

NOTE:

- -XX, -X mean standardized parts, so they may have some differences from the original one.
- Items marked "*" are not stocked since they are seldom required for routine service. Some delay should be anticipated when ordering these items.
- Color Indication of Appearance Parts Example:
  KNOB, BALANCE (WHITE) . . . (RED)
  ↑ Parts of Color ↑ Cabinet's Color
- The mechanical parts with no reference number in the exploded views are not supplied.
- Accessories and packing materials are given in the last of this parts list.
- Abbreviation
  CND : Canadian model
  MY : Malaysia model
  SP : Singapore model
  TW : Taiwan model
  KR : Korea model
  MX : Mexican model
  AR : Argentina model
  CH : Chinese model

The components identified by mark ⚠ or dotted line with mark ⚠ are critical for safety. Replace only with part number specified.

Les composants identifiés par une marque ⚠ sont critiques pour la sécurité. Ne les remplacer que par une pièce portant le numéro spécifié.

以阴影和⚠标志来识别的零部件在安全方面具有关键性。因此只能以规定号码的零部件来更换。

4-1. FRONT PANEL SECTION

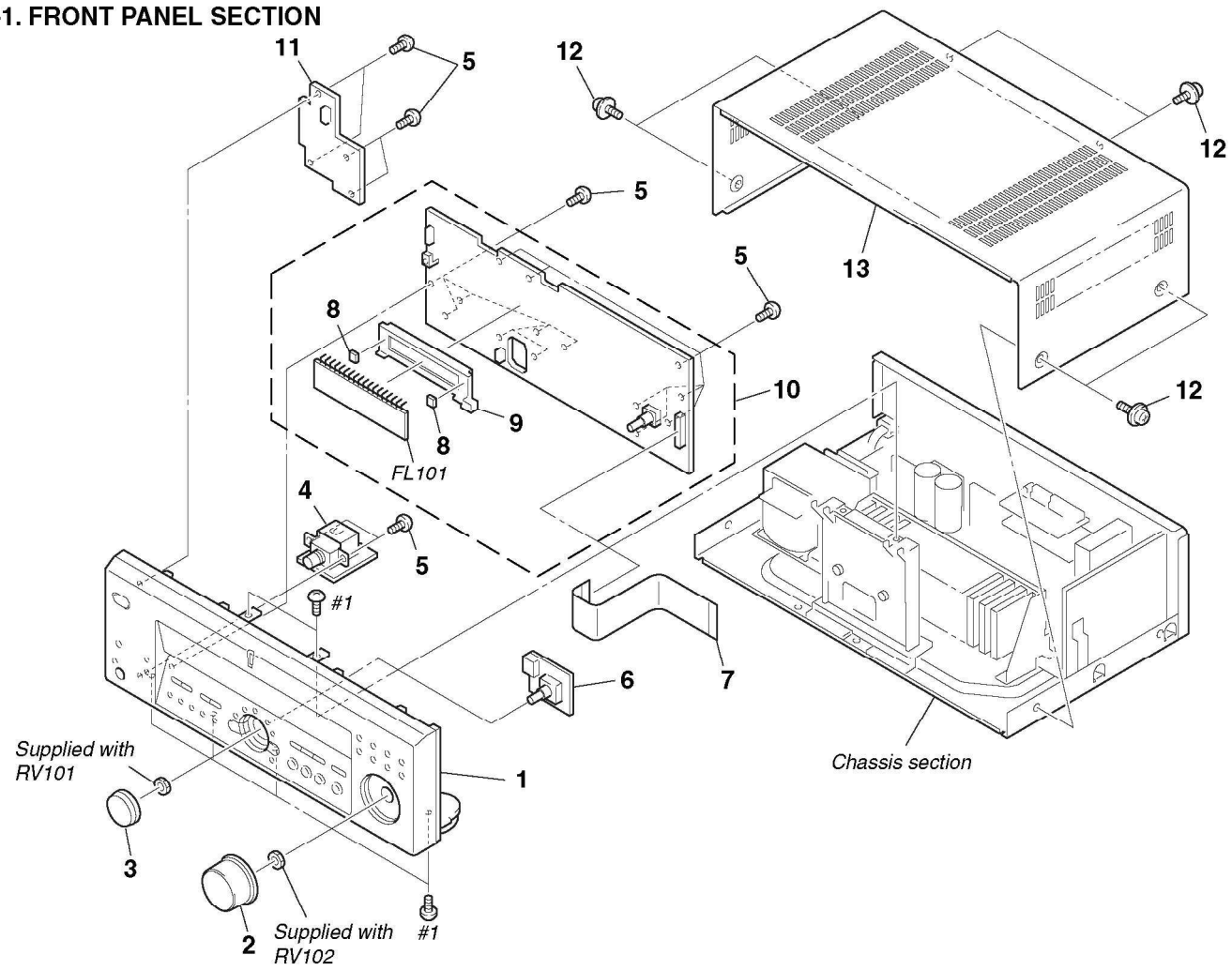

Ref. No.	Part No.	Description	Remarks
1	X-4953-423-1	FRONT PANEL ASSY (BLACK)(US)	
1	X-4953-464-1	FRONT PANEL ASSY (SILVER)(US)	
1	X-4953-465-1	FRONT PANEL ASSY (BLACK)(AEP,UK)	
1	X-4953-466-1	FRONT PANEL ASSY (BLACK)(E)	
1	X-4953-468-1	FRONT PANEL ASSY (GOLD)(MY,SP,TW,KR,CH)	
1	X-4953-525-1	FRONT PANEL ASSY (BLACK)(CND)	
1	X-4953-819-1	FRONT PANEL ASSY (SILVER)(E,MX,AR)	
1	X-4954-220-1	FRONT PANEL ASSY (SILVER)(AEP)	
2	4-232-113-01	KNOB (VOL)(FOR BLACK)	
2	4-232-113-11	KNOB (VOL)(FOR SILVER)	
2	4-232-113-21	KNOB (VOL)(FOR GOLD)	
3	4-232-239-01	KNOB (JOG)(FOR BLACK)	
3	4-232-239-11	KNOB (JOG)(FOR GOLD)	
3	4-232-239-21	KNOB (JOG)(FOR SILVER)	
4	1-680-529-11	HEADPHONE BOARD	
5	4-951-620-01	SCREW (2.6X8), +BVTP	
6	1-680-532-11	JOG BOARD	
7	1-773-250-11	WIRE (FLAT TYPE) (27 CORE)	

Ref. No.	Part No.	Description	Remarks
* 8	4-921-941-01	CUSHION (FL)	
* 9	3-386-245-11	HOLDER (FL)	
10	A-4475-808-A	DISPLAY BOARD, COMPLETE (US)	
10	A-4475-875-A	DISPLAY BOARD, COMPLETE (CND)	
10	A-4475-882-A	DISPLAY BOARD, COMPLETE (E)	
10	A-4475-888-A	DISPLAY BOARD, COMPLETE (AEP,UK,AR)	
10	A-4475-943-A	DISPLAY BOARD, COMPLETE (TW)	
10	A-4475-951-A	DISPLAY BOARD, COMPLETE (CH,MY,SP,KR)	
10	A-4476-952-A	DISPLAY BOARD, COMPLETE (MX)	
11	1-680-528-11	POWER SWITCH BOARD	
12	4-210-291-01	SCREW (CASE 3 TP2)(BLACK)	
12	4-210-291-11	SCREW (CASE 3 TP2)(SILVER)	
13	4-232-418-01	CASE (BLACK)	
13	4-232-418-21	CASE (SILVER)	
13	4-232-418-41	CASE (GOLD)	
FL101	1-518-718-11	INDICATOR TUBE, FLUORESCENT	
#1	7-685-646-79	SCREW +BVTP 3X8 TYPE2 IT-3	
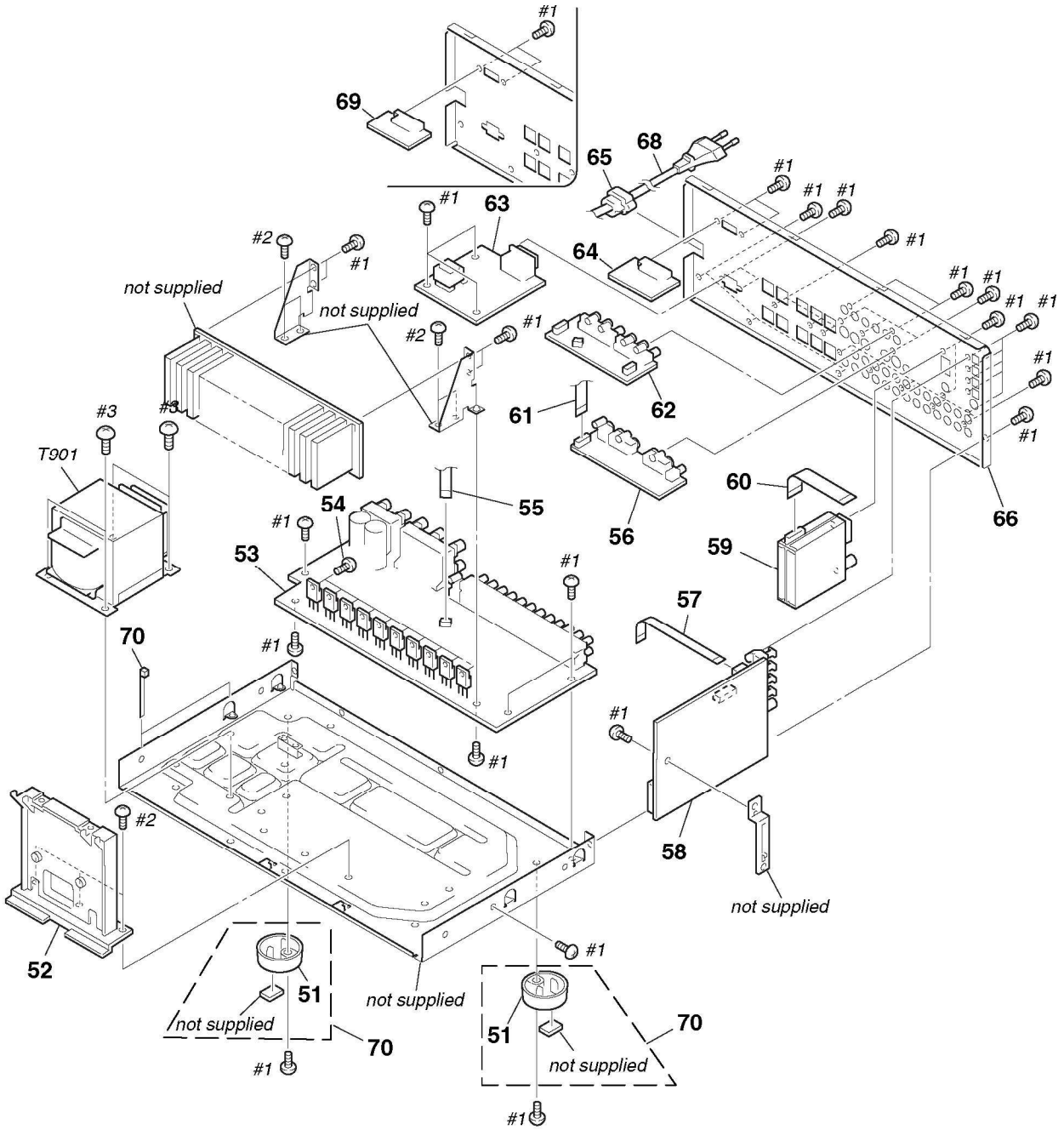
4-2. CHASSIS SECTION