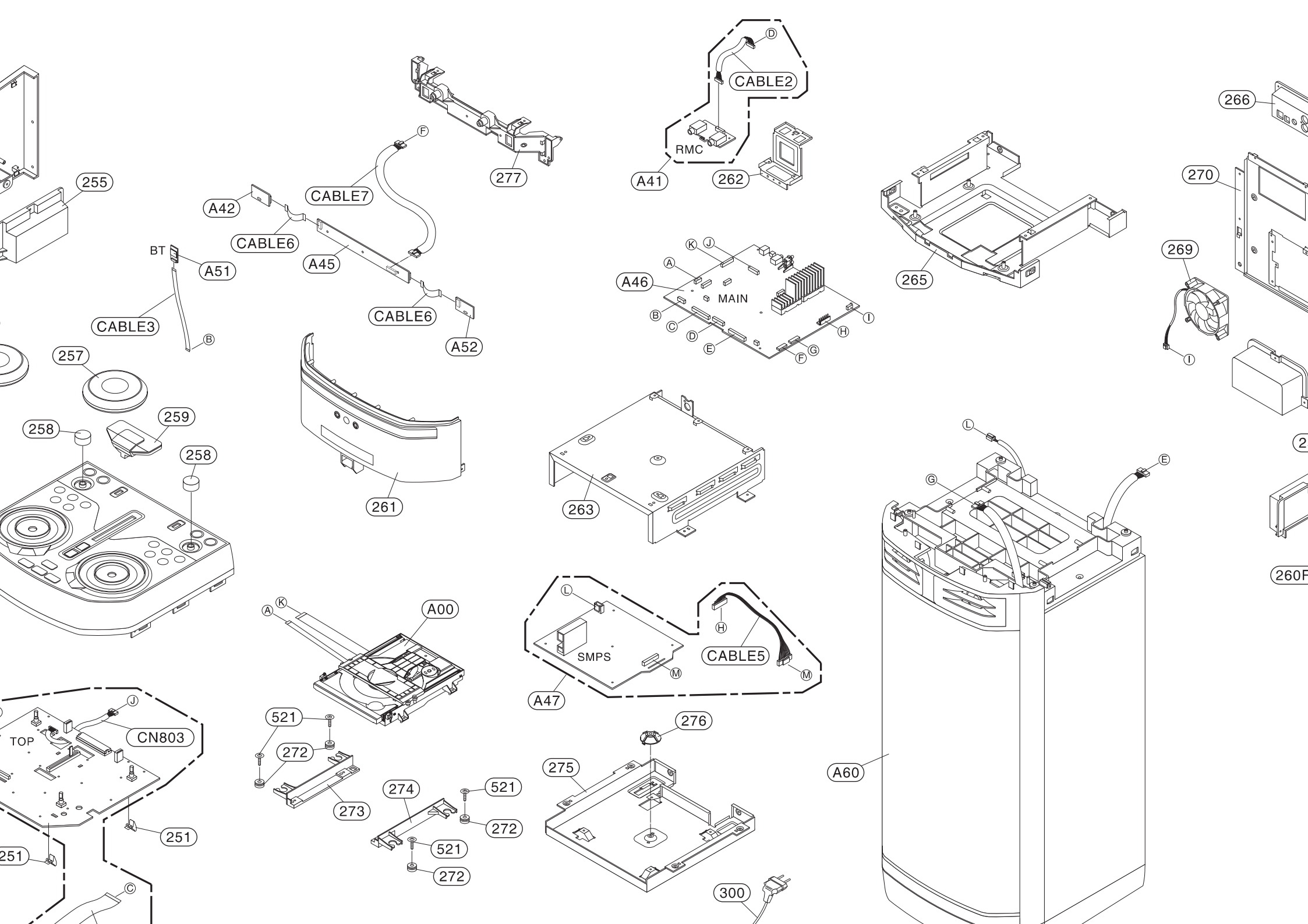

255
BT
A51
CABLE3
B
257
258
259
258
A42
CABLE6
CABLE7
F
A45
CABLE6
A52
277
261
CABLE2
D
RMC
A41
262
A46
K
J
A
MAIN
B
C
D
E
F
G
H
I
263
265
266
270
269
I
L
G
E
260F
A
K
A00
L
SMPS
M
H
CABLE5
M
A47
TOP
J
CN803
251
251
C
521
272
273
274
521
272
521
272
276
275
300
A60

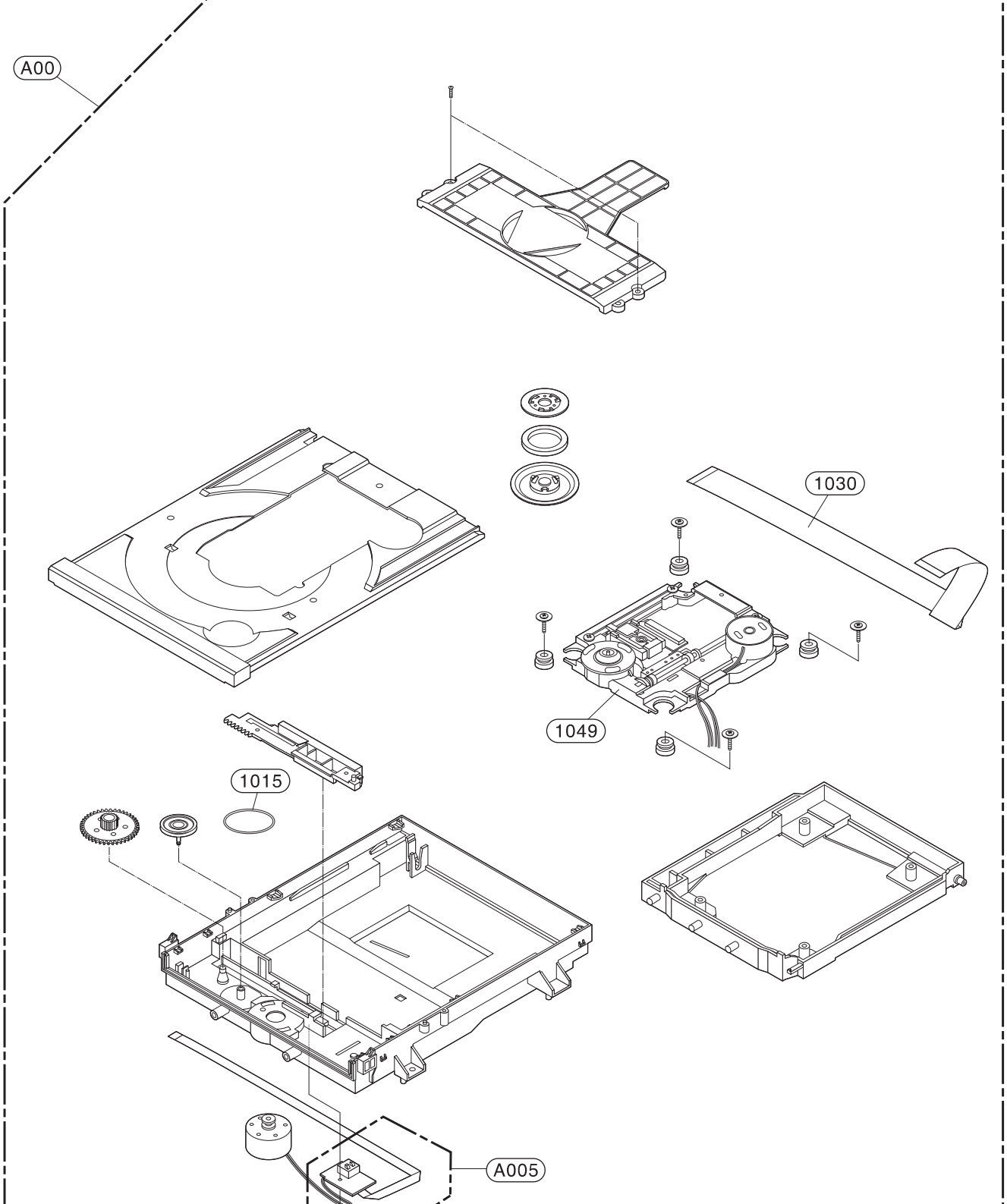
A00
1030
1049
1015
A005

3. PACKING ACCESSORY SECTION

825 FM Wire Antenna

826 Filter, Ferrite Core

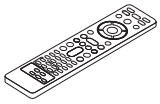

900 Remote Control

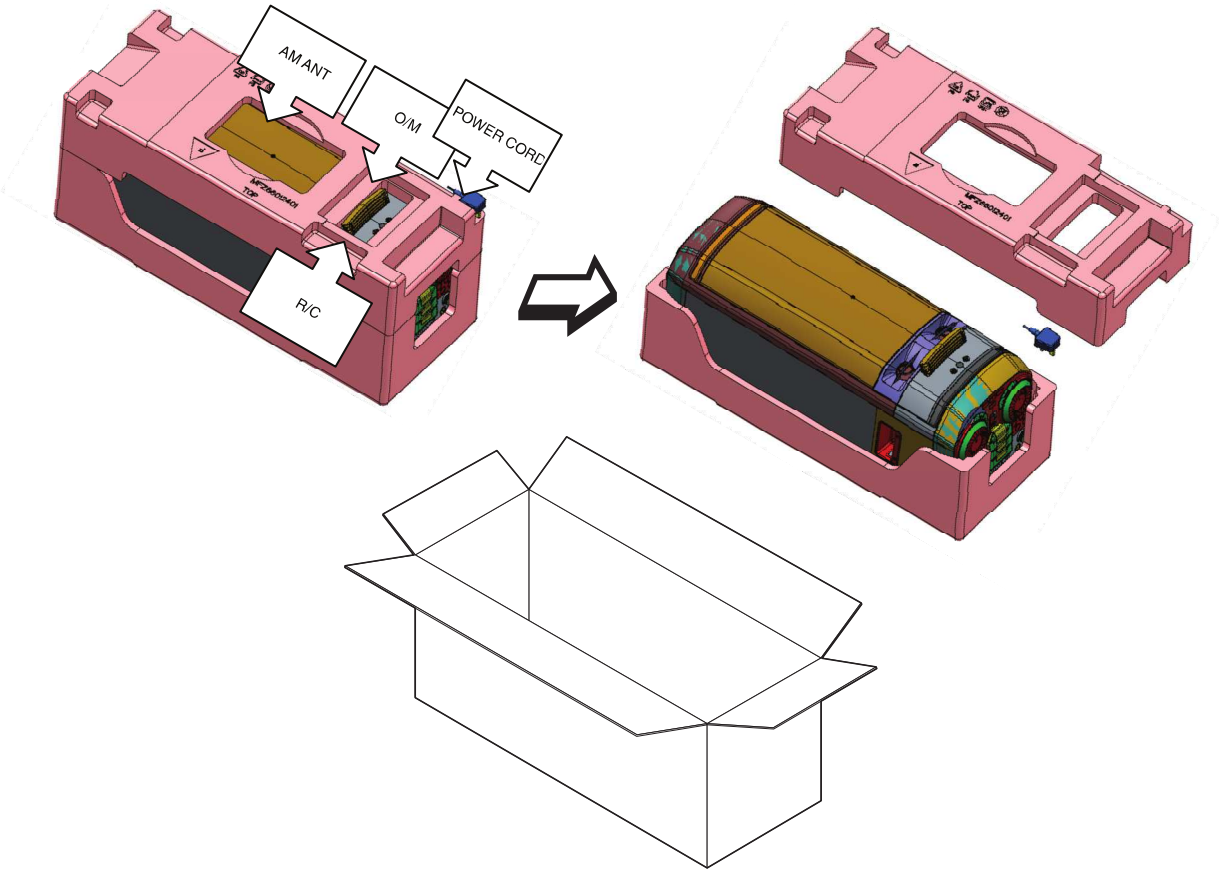

Copyright © 2018 LG Electronics Inc. All rights reserved.
Only for training and service purposes.