Service
Service
Service

19PFL3403/60	20PFL3403S/60	26PFL3403/10
19PFL3403/78	22HFL3350D/10	26PFL3403/85
19PFL3403S/60	22HFL5530H/27	26PFL3403/94
20HFL3330D/10	22HFL5550D/10	26PFL3403D/10
20PFL3403/10	22PFL3403/60	26PFL3403S/60
20PFL3403D/10	22PFL3403S/60	

Styling Sheet

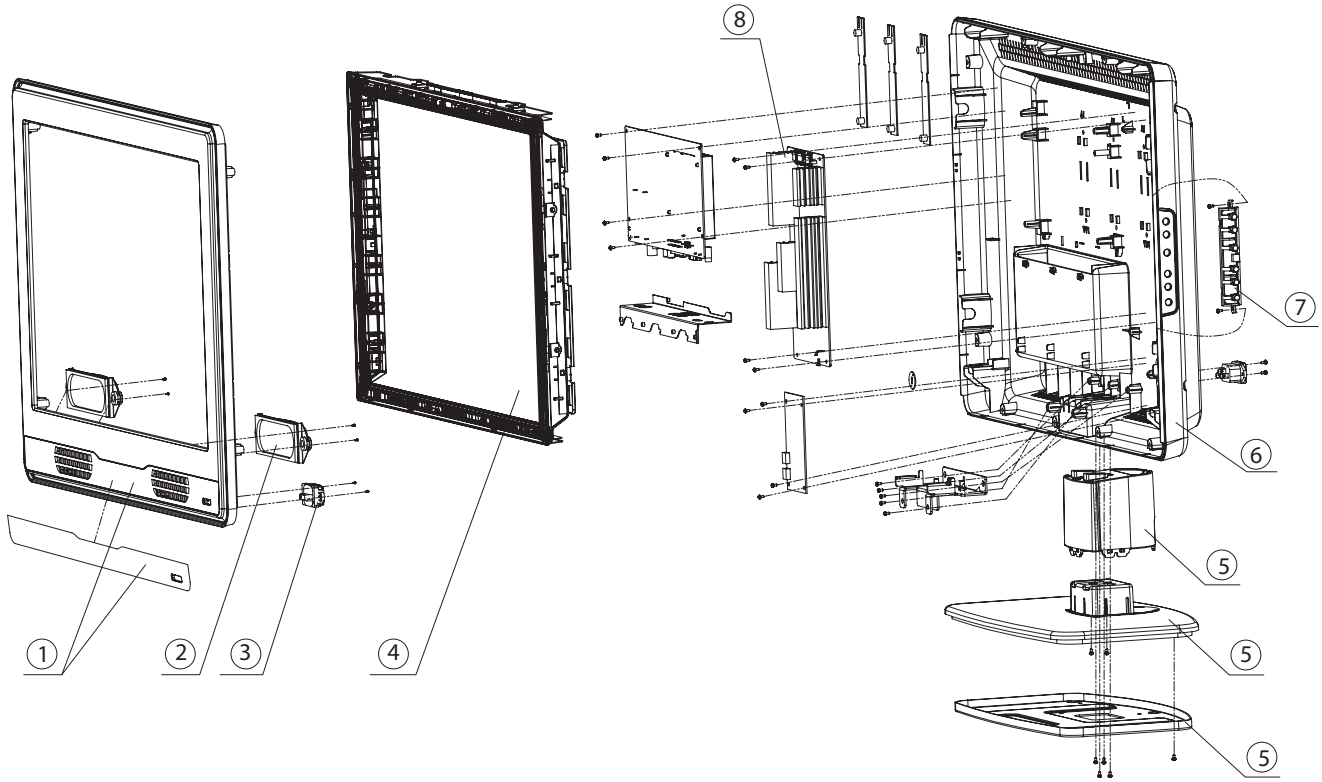

©Copyright 2006 Philips Consumer Electronics B.V. Eindhoven, The Netherlands.
All rights reserved. No part of this publication may be reproduced, stored in a retrieval system or transmitted, in any form or by any means, electronic, mechanical, photocopying, or otherwise without the prior permission of Philips.
Safety regulations require that the set is restored to its original condition and that parts which are identical with those specified are used.

PHILIPS

MG8 OEM_ODM LCD 19" - 26"

Actual Pos Nr	Item number	12NC	Material descriptior	19PFL3403/60	19PFL3403/78	19PFL3403S/60	20HFL3330D/10	20PFL3403/10	20PFL3403D/10	20PFL3403S/60	22HFL3350D/10	22HFL5530H/27	22HFL5550D/10	22PFL3403/60	22PFL3403S/60	26PFL3403/10	26PFL3403/85	26PFL3403/94	26PFL3403D/10	26PFL3403S/60
1	FCAB	9965 100 17639	Front cabinet 19"		x															
1	FCAB	9965 100 18251	Front cabinet 19"			x														
1	CABINET	9965 100 15313	Front cabinet 20"					x												
1	FCABASSY	9965 100 14425	Front cabinet 20"						x											
1	FCAB	9965 100 18457	Front cabinet 20"				x													
1	FCAB	9965 100 17704	Front cabinet 22"											x	x					
1	FCAB	9965 100 19126	Front cabinet 22"									x								
1	FCAB	9965 100 20003	Front cabinet 22"								x		x							
1	64	9965 100 15336	Front cabinet 26"													x				
1	L68	9965 100 14608	Front cabinet 26"																x	
1	FCAB	9965 100 17117	Front cabinet 26"															x		
1	FCAB	9965 100 18497	Front cabinet 26"														x			
1	FCAB	9965 100 18719	Front cabinet 26"																	x
2	SPEAKER	9965 100 14609	Loudspeaker 120R 8W													x	x	x	x	x
2	SPEAKER	9965 100 15314	Loudspeaker 160R 5W		x		x													
2	SPEAKER	9965 100 16896	Loudspeaker 160R 5W									x								
2	5	9965 100 18629	Loudspeaker 160R 5W								x		x							
2	66	9965 100 15314	Loudspeaker 16R 5W			x		x												
2	SPEAKER	9965 100 14426	Loudspeaker 16R 5W						x					x	x					
3	76	9965 100 15316	IR module					x		x										
3	IRASSY	9965 100 14479	IR module						x							x			x	x
3	IRASSY	9965 100 17119	IR module															x		
3	IRASSY	9965 100 17263	IR module	x																
3	IRASSY	9965 100 17640	IR module		x												x			
3	IRASSY	9965 100 17692	IR module											x	x					
3	IRASSY	9965 100 18459	IR module				x													
3	IRASSY	9965 100 18252	IR module			x														
3	IRASSY	9965 100 19127	IR module									x								
3	IRASSY	9965 100 20005	IR module								x		x							
4	PANEL	9965 100 14431	Display LCD LC201V02 20.1 VGA				x	x	x	x										
4	PANEL	9322 260 57682	Display LCD M190Z1-L01 (CMOP)	x	x	x														
4	PANEL	9322 260 58682	Display LCD M220Z1-L03 (CMOP)								x	x	x	x	x					
4	1005	9322 262 26682	Display LCD T260XW02VM (AUOP)														x	x		
4	PANEL	9965 100 14605	Display LCD T260XW03													x			x	
4	PANEL	9965 100 18739	Display LCD TV-V260B1 (AUOP)																	x
5	stand	9965 100 17638	Stand 19"		x															
5	stand	9965 100 17696	Stand 19"											x						
5	stand	9965 100 18255	Stand 19"			x														
5	stand	9965 100 17269	Stand 19" & 22"	x											x					
5	STAND	9965 100 14435	Stand 20"						x	x										
5	STAND	9965 100 15269	Stand 20"					x												
5	stand	9965 100 18458	Stand 20"				x													
5	stand	9965 100 20032	Stand 22"								x									
5	stand	9965 100 35453	Stand 22"										x							
5	121	9965 100 15341	Stand 26"													x				
5	L38	9965 100 14607	Stand 26"																x	
5	stand	9965 100 17116	Stand 26"															x		x
5	stand	9965 100 18496	Stand 26"														x			
6	RCAB	9965 100 18254	Back cover 19"			x														
6	RCAB	9965 100 18631	Back cover 19"	x																
6	REARCOVER	9965 100 14430	Back cover 20"						x											
6	BCOVER	9965 100 15322	Back cover 20"					x												
6	RCAB	9965 100 18466	Back cover 20"				x													
6	RCAB	9965 100 18633	Back cover 20"											x						
6	RCAB	9965 100 18636	Back cover 20"							x										
6	RCAB	9965 100 17735	Back cover 22"												x					
6	RCAB	9965 100 19136	Back cover 22"									x								
6	BCAB	9965 100 20010	Back cover 22"										x							
6	BCAB	9965 100 20181	Back cover 22"								x									
6	BCOVER	9965 100 15337	Back cover 26"													x				
6	BACKCOVER	9965 100 14585	Back cover 26"																x	
6	RCAB	9965 100 17443	Back cover 26"		x													x		
6	RCAB	9965 100 18536	Back cover 26"														x			
6	RCAB	9965 100 19191	Back cover 26"																	x
7	KEYASSY	9965 100 14484	Keyboard control						x			x								x
7	KEYASSY	9965 100 15318	Keyboard control					x		x										
7	KEYASSY	9965 100 14484	Keyboard control													x			x	
7	KEYASSY	9965 100 17120	Keyboard control															x		
7	KEYASSY	9965 100 17264	Keyboard control	x																
7	KEYASSY	9965 100 17641	Keyboard control		x												x			
7	KEYASSY	9965 100 17693	Keyboard control											x	x					
7	KEYASSY	9965 100 18253	Keyboard control			x														
7	KEYASSY	9965 100 18465	Keyboard control				x													
7	Keyboard	9965 100 20009	Keyboard control								x		x							
8	POWERASSY	9965 100 14436	Power supply unit	x	x	x	x	x	x	x				x	x					
8	POWERASSY	9965 100 14586	Power supply unit PWL01B													x	x	x	x	x
8	POWERASSY	9965 100 19122	Power supply unit PWL20A-01									x								
8	PSUASSY	9965 100 20030	Power supply unit PWL20C-02								x		x							
8	POWERASSY	9965 100 14612	Power supply unit PWL37C04													x	x		x	x
	S010	9965 100 15270	Compair UART adapter cable					x												
	InvertPSU	9965 100 14478	Inverter PSU				x		x	x										
	InvertPSU	9965 100 16908	Inverter PSU	x	x							x								
	6	9965 100 17691	Inverter PSU			x								x	x					
	PWRASSY1	9965 100 18782	Inverter PSU															x		
	InvertPSU	9965 100 20020	Inverter PSU								x		x							
	LenIR	9965 100 17118	IR len								x		x							
	72	3122 785 91070	Lens					x												
	69	9965 100 14428	Lens						x					x	x	x			x	
	Lens	9965 100 17118	Lens		x	x	x										x	x		x
	LensClk	9965 100 20004	Lens clock								x		x							
	P10	9965 100 14402	LVDS cable		x															
	LVDS	9965 100 17124	LVDS cable															x		x
	LVDS	9965 100 17675	LVDS cable												x					
	LVDS	9965 100 17697	LVDS cable	x		x								x						
	LVDS	9965 100 18511	LVDS cable														x			
	LVDS	9965 100 19145	LVDS cable									x								
	38	9965 200 33793	LVDS cable 400mm													x			x	
	38	9965 200 33723	LVDS cable 450mm				x		x											
	CORD	9965 100 17873	Mainscord														x			
	CORD	9965 100 19139	Mainscord									x								
	CORD1	9965 100 14433	Mainscord 1.8m			x		x	x		x		x			x			x	
	CORD2	9965 100 14434	Mainscord 1.8m			x		x	x	x	x		x	x		x			x	x
	40	9965 100 17674	Mainscord 1.8m		x															
	CORD2	9965 100 17734	Mainscord 1.8m	x											x					
	REMOTE	9965 100 20186	Remote control								x		x							
	REMOTE	9965 100 14606	Remote control				x												x	
	REMOTE	9965 200 33720	Remote control						x											
	REMOTE	9965 100 15270	Remote control YKF230-010	x		x		x		x				x	x	x		x		x
	REMOTE	9965 100 17870	Remote control YKF230-010		x												x			
			Creation Date:								######## 28-Nov-08	######## 29-Aug-08	######## 28-Nov-08	######## 28-Nov-08				######## 18-Sep-08		######## 29-Aug-08
			Modification date:																	