SECTION 5
EXPLODED VIEWS

NOTE:
- -XX, -X mean standardized parts, so they may have some differences from the original one.
- Items marked "*" are not stocked since they are seldom required for routine service. Some delay should be anticipated when ordering these items.
- The mechanical parts with no reference number in the exploded views are not supplied.
- Hardware (# mark) list and accessories and packing materials are given in the last of this parts list.
- Color Indication of Appearance Parts Example:
  KNOB, BALANCE (WHITE) . . . (RED)
  ↑ Parts of Color ↑ Cabinet's Color
- Abbreviation

CND	: Canadian	G	: German
EE	: East European	EA	: Saudi Arabia
MY	: Malaysia	SP	: Singapore
AUS	: Australian	CH	: Chinese

When indicating parts by reference number, please include the board name.

The components identified by mark ⚠ or dotted line with mark ⚠ are critical for safety. Replace only with part number specified.

Les composants identifiés par une marque ⚠ sont critiques pour la sécurité. Ne les remplacer que par une pièce portant le numéro spécifié.

以阴影和⚠标志来识别的零部件在安全方面具有关键性。因此只能以规定号码的零部件来更换。

5-1. FRONT PANEL SECTION

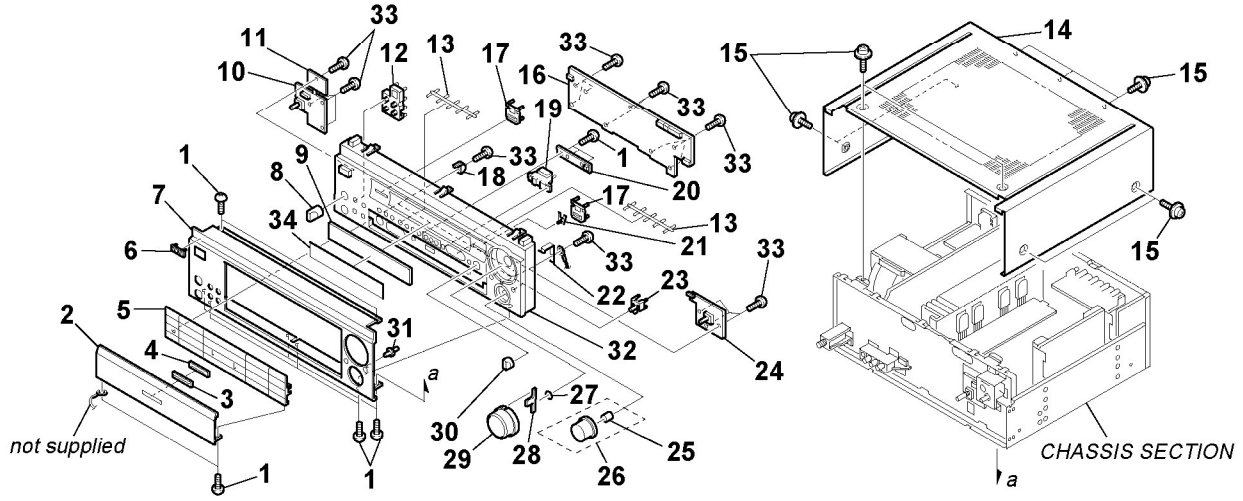

Ref. No.	Part No.	Description	Remarks
1	3-704-515-21	SCREW (BV/RING)	
2	4-900-632-01	LID (FRONT) (BLACK)	
2	4-900-632-11	LID (FRONT) (GOLD)	
* 3	4-900-642-01	ESCUTCHEON (LID) (SILVER)	
* 3	4-900-642-11	ESCUTCHEON (LID) (GOLD)	
* 4	4-900-643-01	INDICATOR (LID)	
* 5	4-900-634-01	LID (BASE) (BLACK)	
* 5	4-900-634-11	LID (BASE) (GOLD)	
6	4-942-568-41	EMBLEM (NO.5), SONY (BLACK)	
6	4-942-568-51	EMBLEM (NO.5), SONY (GOLD)	
7	4-900-631-21	PANEL, FRONT (GOLD) (V55ES)	
7	4-900-631-01	PANEL, FRONT (BLACK) (DA50ES:US,CND)	
7	4-900-631-11	PANEL, FRONT (GOLD) (DA50ES:AEP)	
7	4-900-631-31	PANEL, FRONT (BLACK) (DA30ES)	
7	4-900-631-52	PANEL, FRONT (BLACK)	(DA50ES:AEP,UK,G,EE,AUS)
7	4-900-631-61	PANEL, FRONT(BLACK)(DA50ES:E,EA,PX,SP,MY)	
8	4-957-383-01	KNOB (F14) (BLACK)	
8	4-957-383-21	KNOB (F14) (GOLD)	
9	4-900-648-01	WINDOW	
* 10	1-670-142-11	SP.SWITCH BOARD	
* 11	1-670-749-11	POWER SWITCH BOARD	
12	4-900-563-11	BUTTON (5) (BLACK)	
12	4-900-563-21	BUTTON (5) (GOLD)	
13	4-991-388-01	INDICATOR (FUNC)	
* 14	X-4950-431-1	CASE ASSY (BLACK)	
* 14	X-4950-437-1	CASE ASSY (GOLD)	
15	4-210-291-01	SCREW (CASE 3 TP2) (BLACK)	
15	4-210-291-11	SCREW (CASE 3 TP2) (GOLD)	
* 16	A-4414-286-A	DISPLAY BOARD,COMPLETE(DA50ES:US,CND)	
* 16	A-4414-287-A	DISPLAY BOARD,COMPLETE	(DA50ES:AEP,UK,G,EE,AUS)
* 16	A-4414-288-A	DISPLAY BOARD,COMPLETE	(DA50ES:SP,MY/V55ES)
* 16	A-4414-289-A	DISPLAY BOARD,COMPLETE (DA50ES:E,EA,PX)	
* 16	A-4414-299-A	DISPLAY BOARD,COMPLETE (DA30ES)	
17	4-991-386-01	BUTTON (WINDOW)	
18	4-900-644-11	FULCRUM (GOLD)	
18	4-900-644-01	FULCRUM (BLACK)	
* 19	4-900-638-01	HOUSE, LAMP	
* 20	1-670-147-11	LED BOARD	
21	4-900-645-01	INDICATOR (S/F)	
22	4-900-639-01	SPRING	
23	4-900-491-01	BUTTON (MUTE) (BLACK)	
23	4-900-491-11	BUTTON (MUTE) (GOLD)	
* 24	1-670-146-11	FUNCTION BOARD	
25	3-703-466-00	SPRING (6600)	
26	X-4948-601-1	KNOB (FUNC) ASSY (BLACK)	
26	X-4948-634-1	KNOB (FUNC) ASSY (GOLD)	
27	3-350-426-01	SPRING, RING	
28	4-998-207-11	INDICATOR (VOL)	
29	X-3375-592-1	KNOB (VOL) ASSY (BLACK)	
29	X-4949-977-1	KNOB (VOL) ASSY (GOLD)	
30	4-900-500-01	KNOB (BAL) (BLACK)	
30	4-900-500-11	KNOB (BAL) (GOLD)	
* 31	X-4950-462-1	LENS ASSY, LED	
32	X-4949-966-1	BASE ASSY, PANEL (BLACK)	(DA30ES/DA50ES:US,CND)
32	X-4949-967-1	BASE ASSY, PANEL (BLACK)	(DA50ES:AEP,UK,G,EE,AUS)
32	X-4949-968-1	BASE ASSY, PANEL (BLACK)	(DA50ES:E,EA,PX,SP,MY)
32	X-4949-969-1	BASE ASSY, PANEL (GOLD)	(DA50ES:AEP,UK,G,EE,AUS)
32	X-4949-970-1	BASE ASSY, PANEL (GOLD) (V55ES)	
33	4-951-620-01	SCREW (2.6×8),+BVTP	
34	4-900-649-01	FILTER	