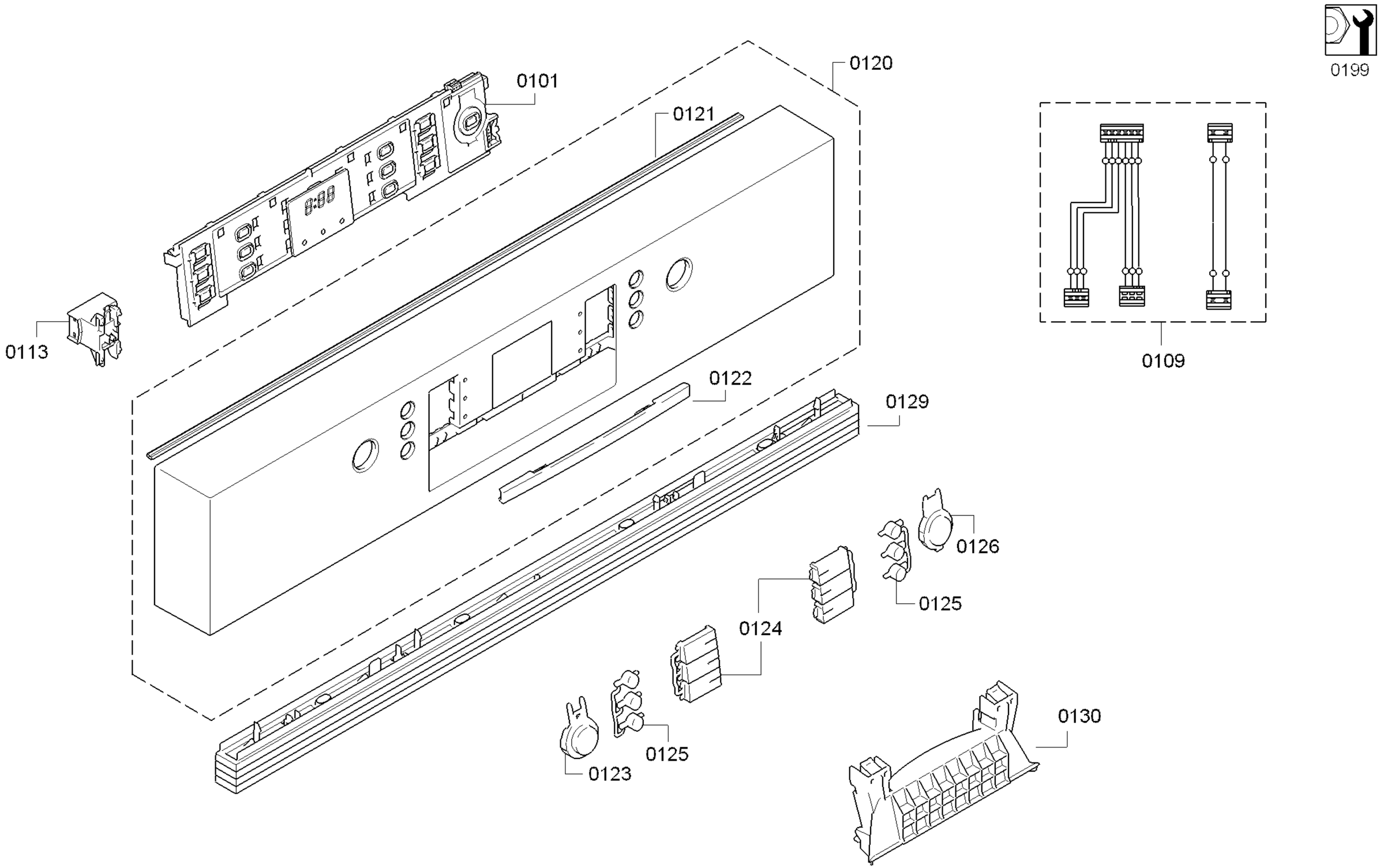

Copyright © (2013) by Bosch / 205502

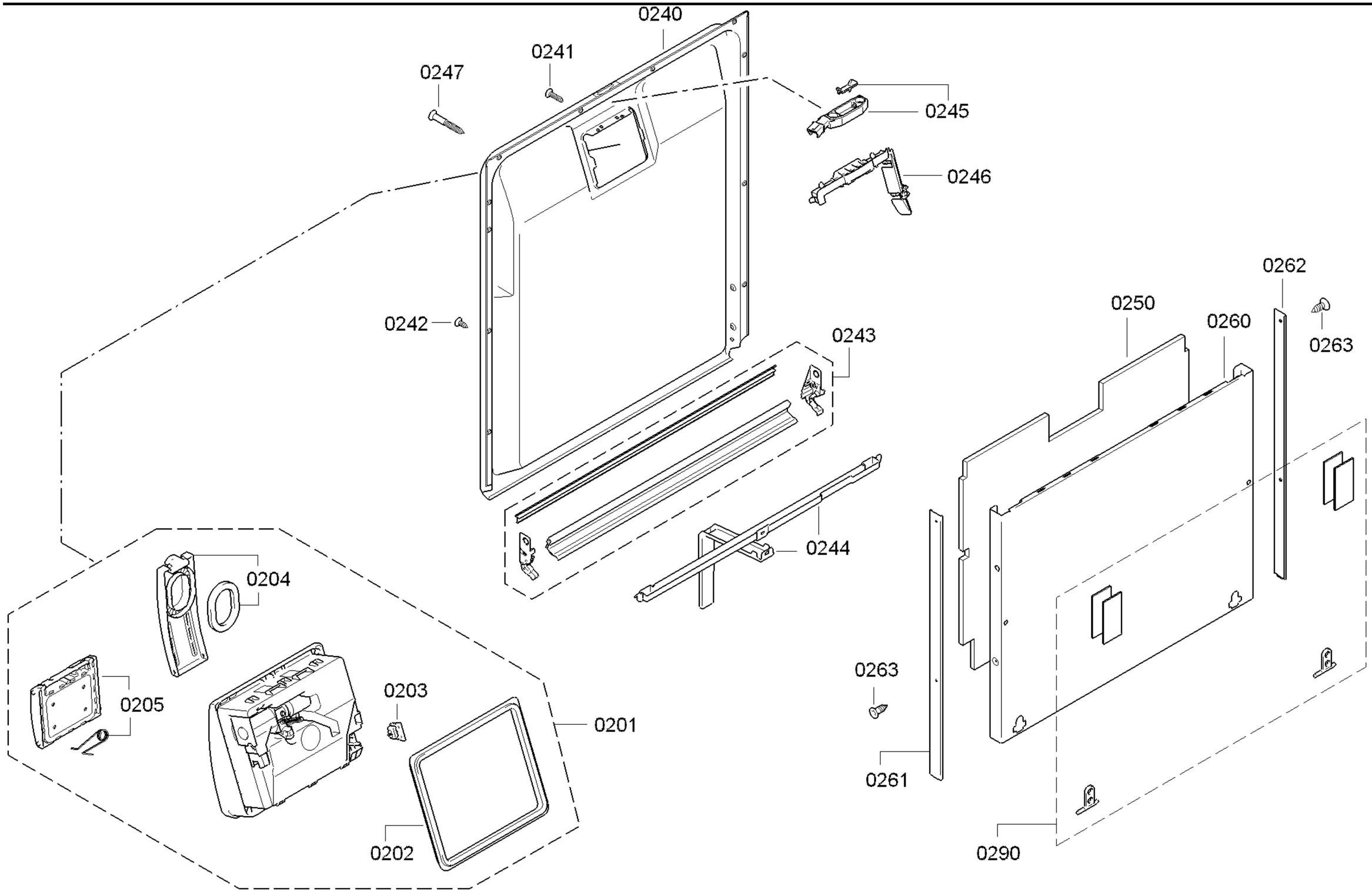

Copyright © (2013) by Bosch / 205502

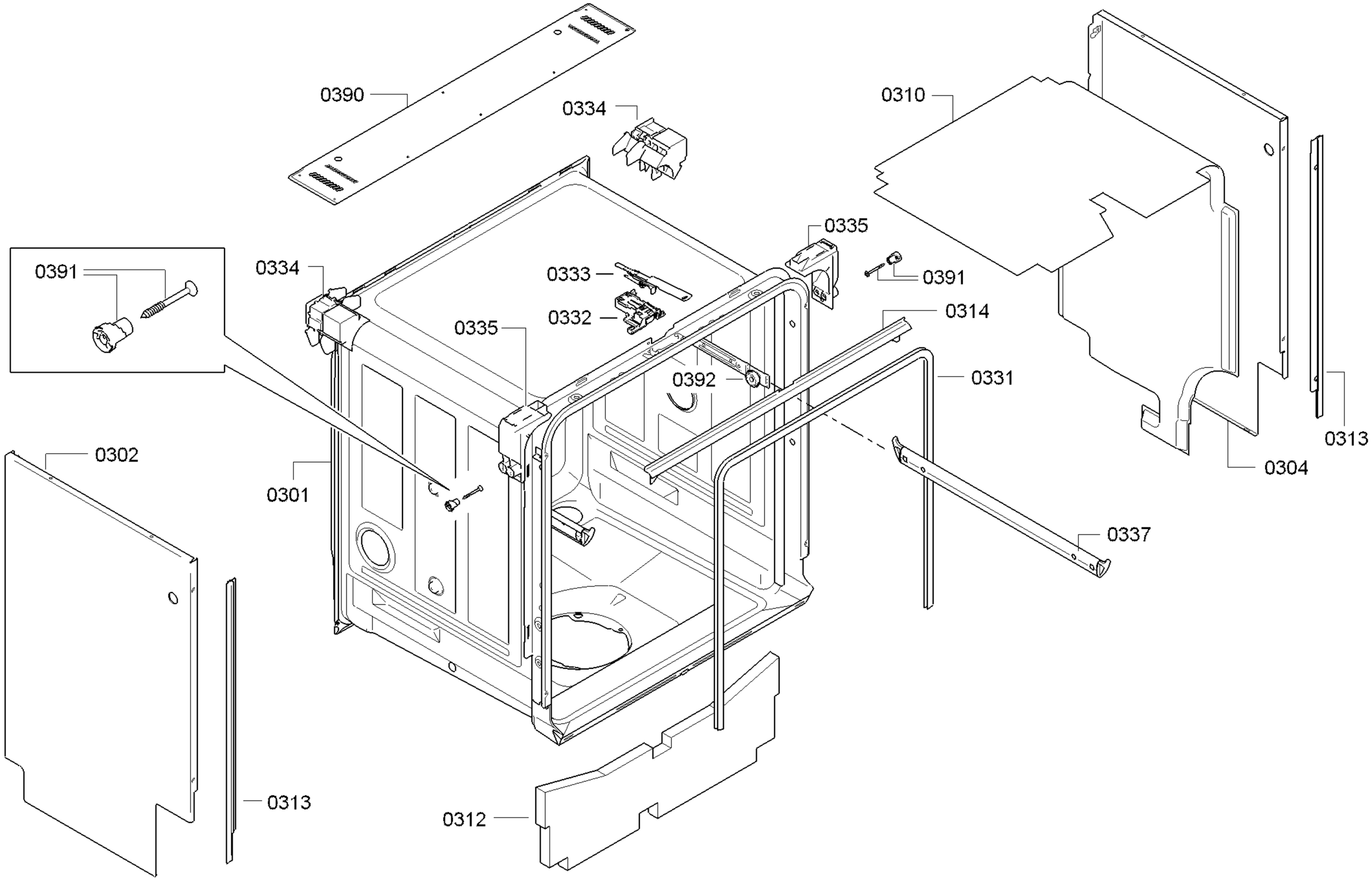

Copyright © (2013) by Bosch / 205502

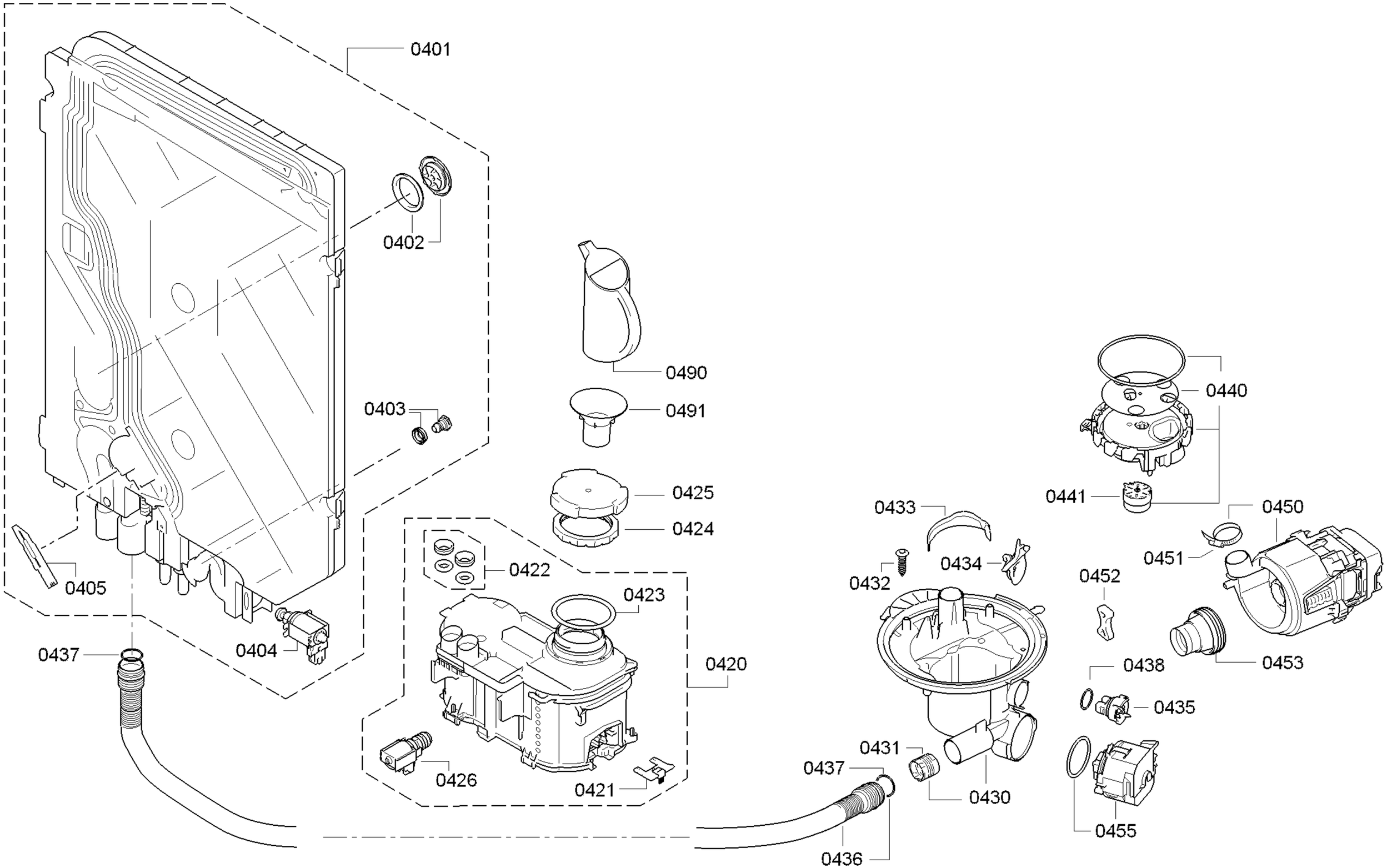

Copyright © (2013) by Bosch / 205502

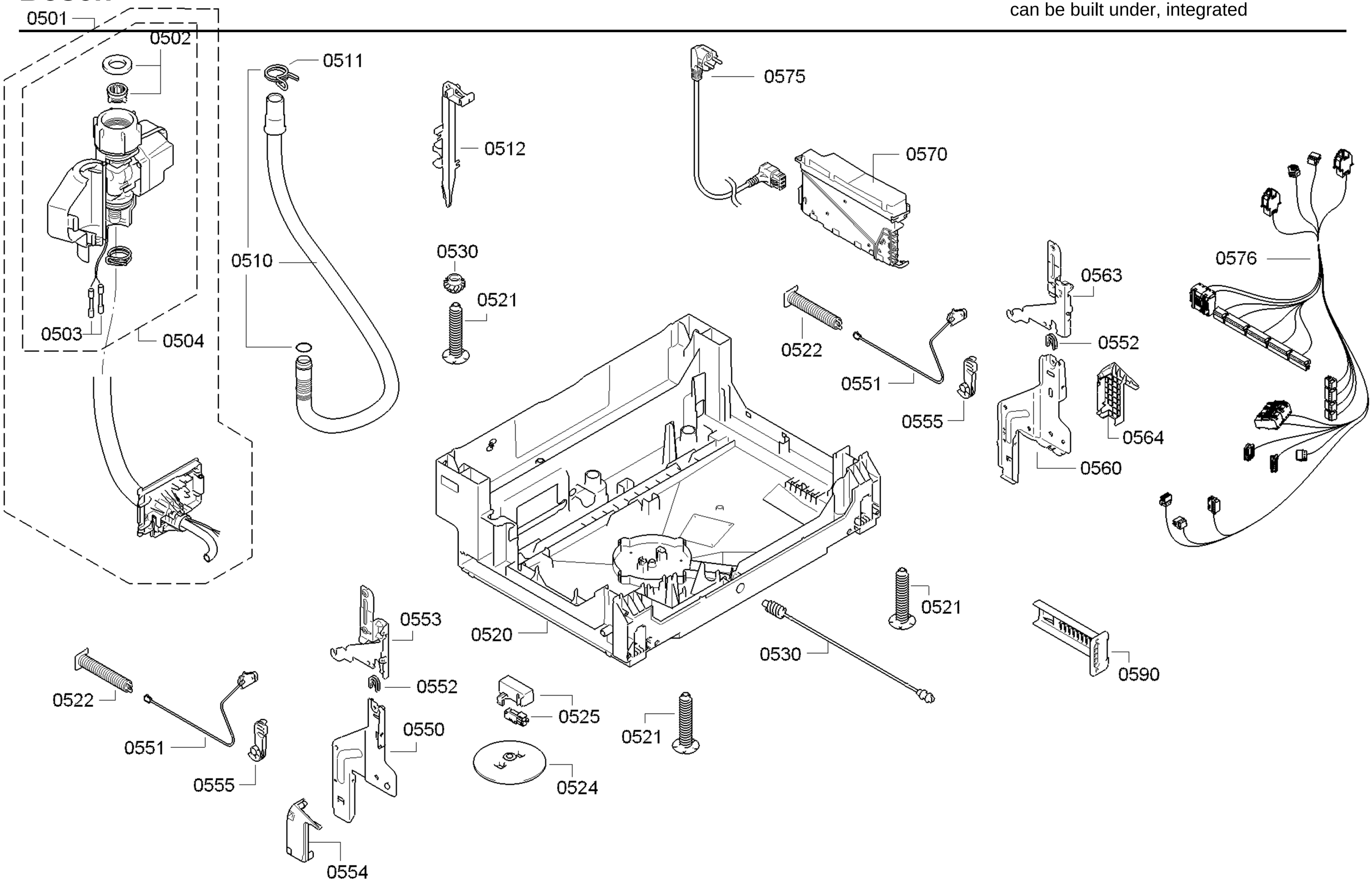

Copyright © (2013) by Bosch / 205502

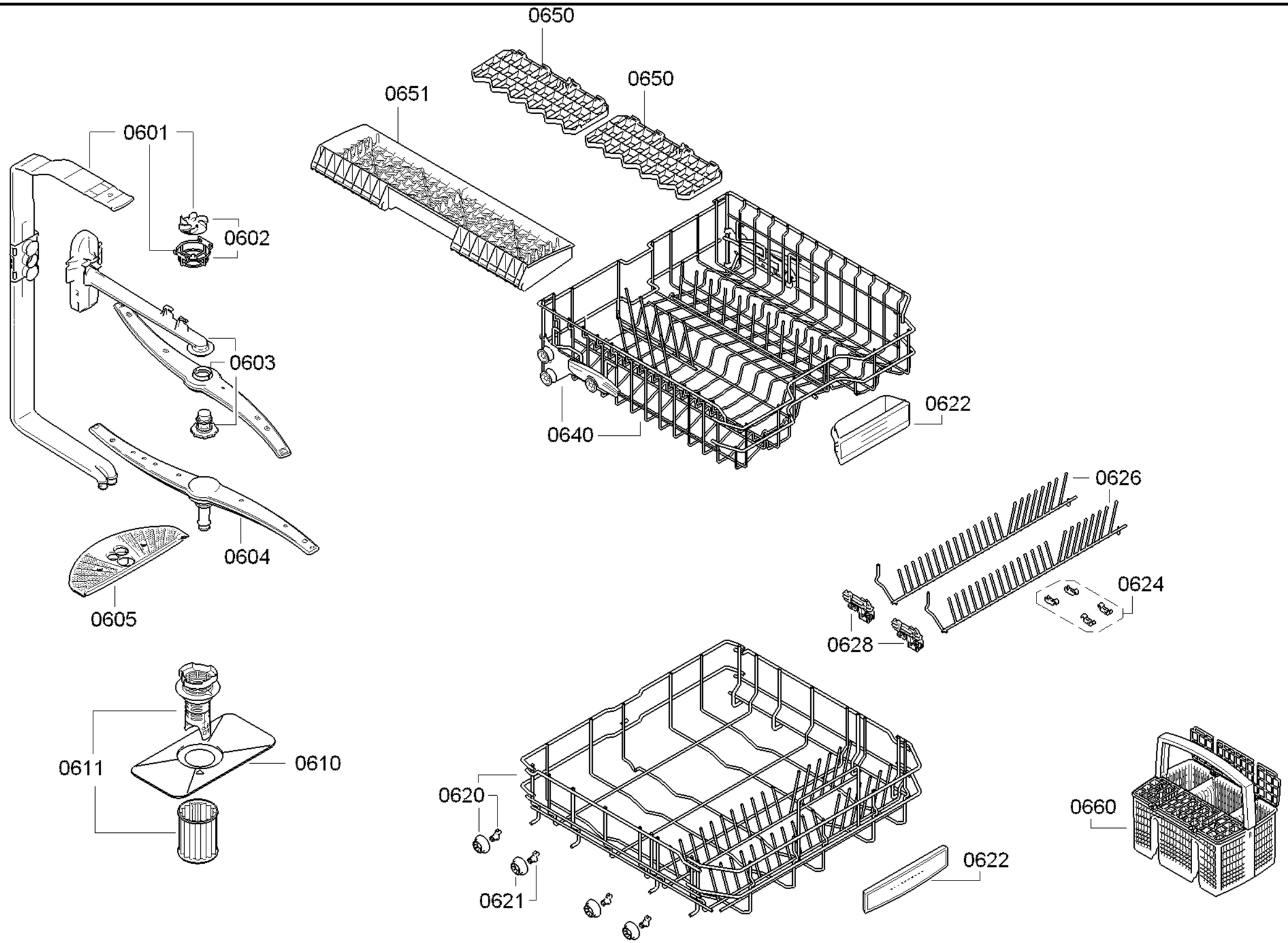

Copyright © (2013) by Bosch / 205502