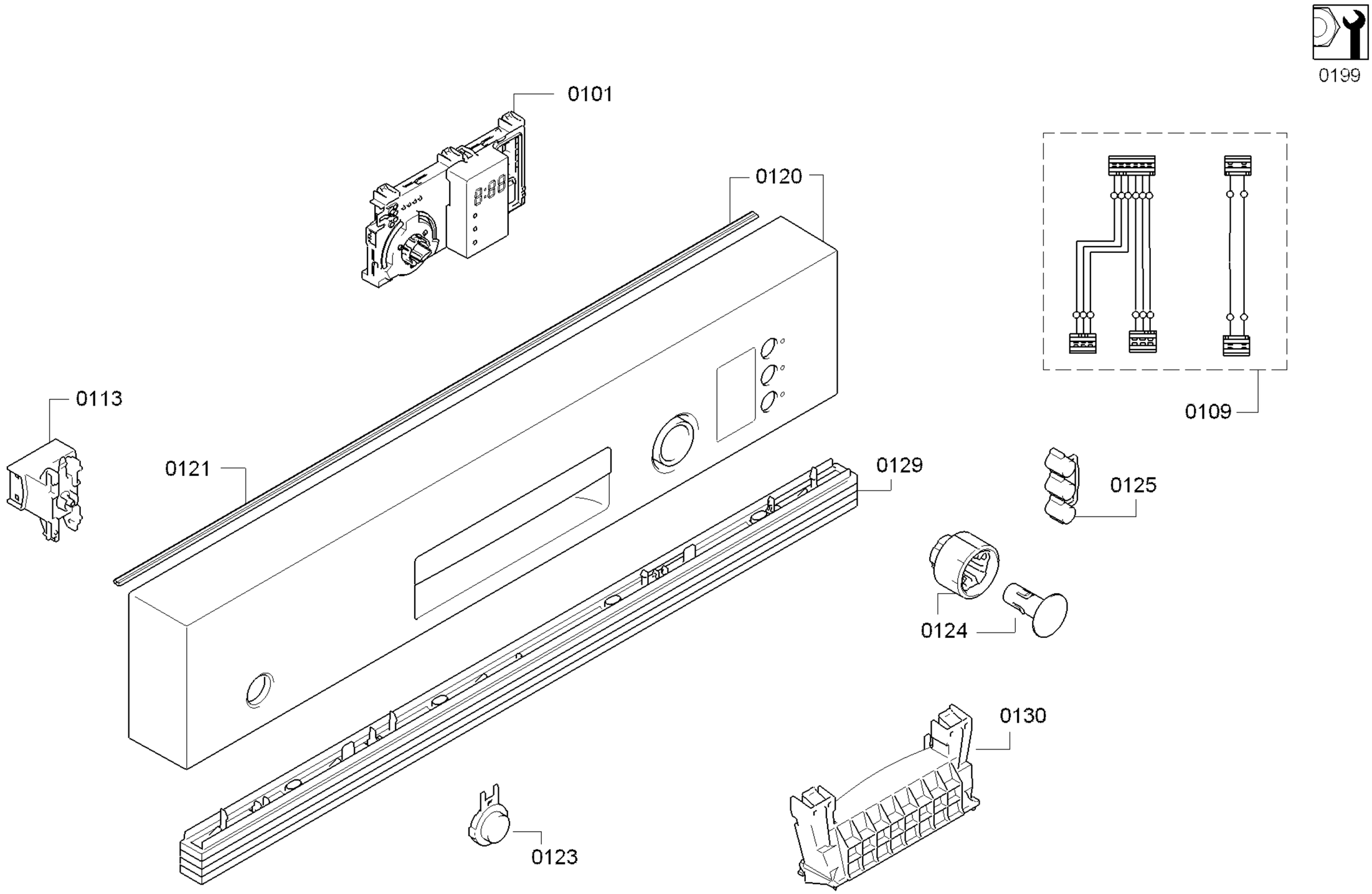

Copyright © (2013) by

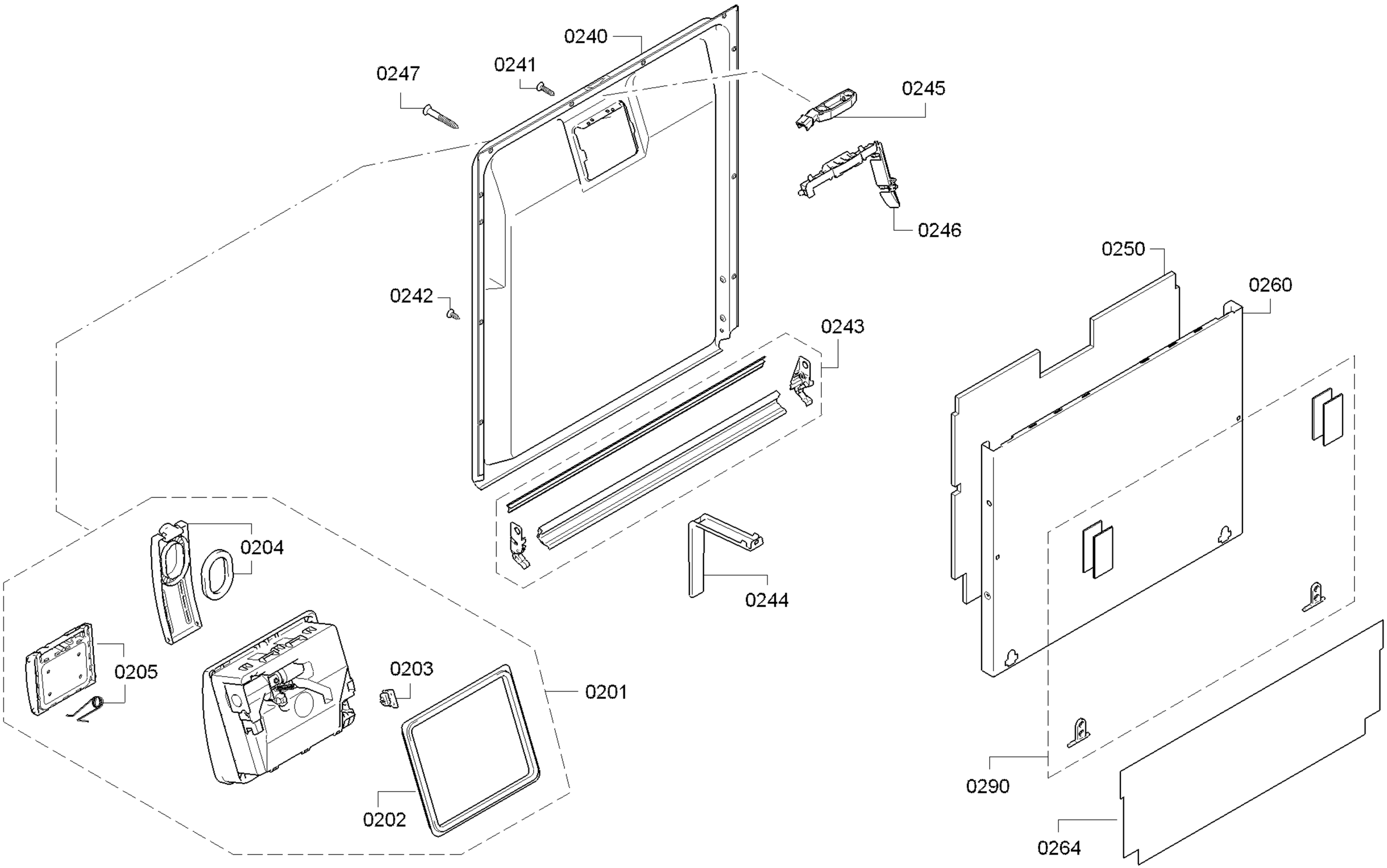

58300000154716 aet 000 d 2/6

Copyright © (2013) by

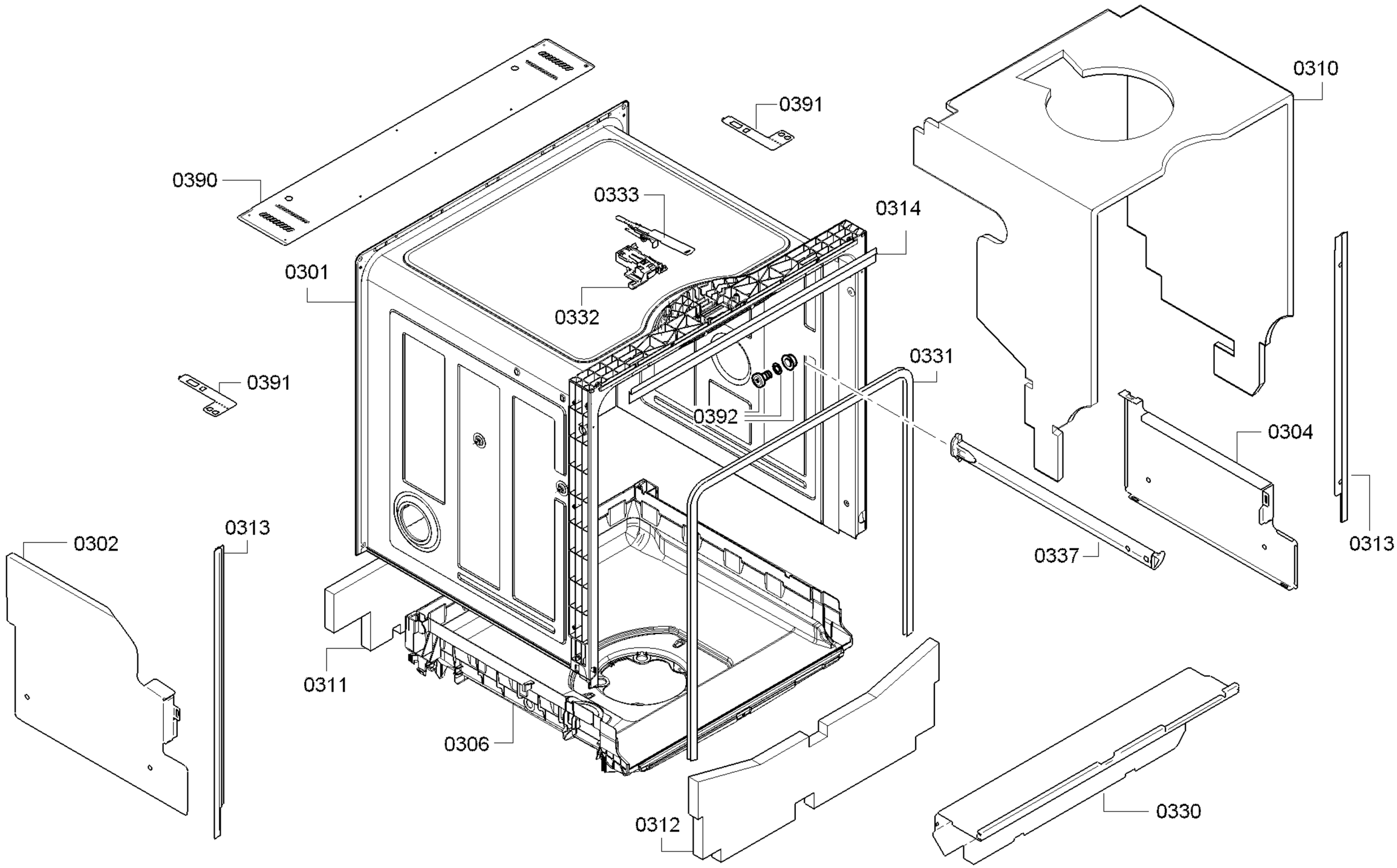

58300000154716 aet 000 d 3/6

Copyright © (2013) by

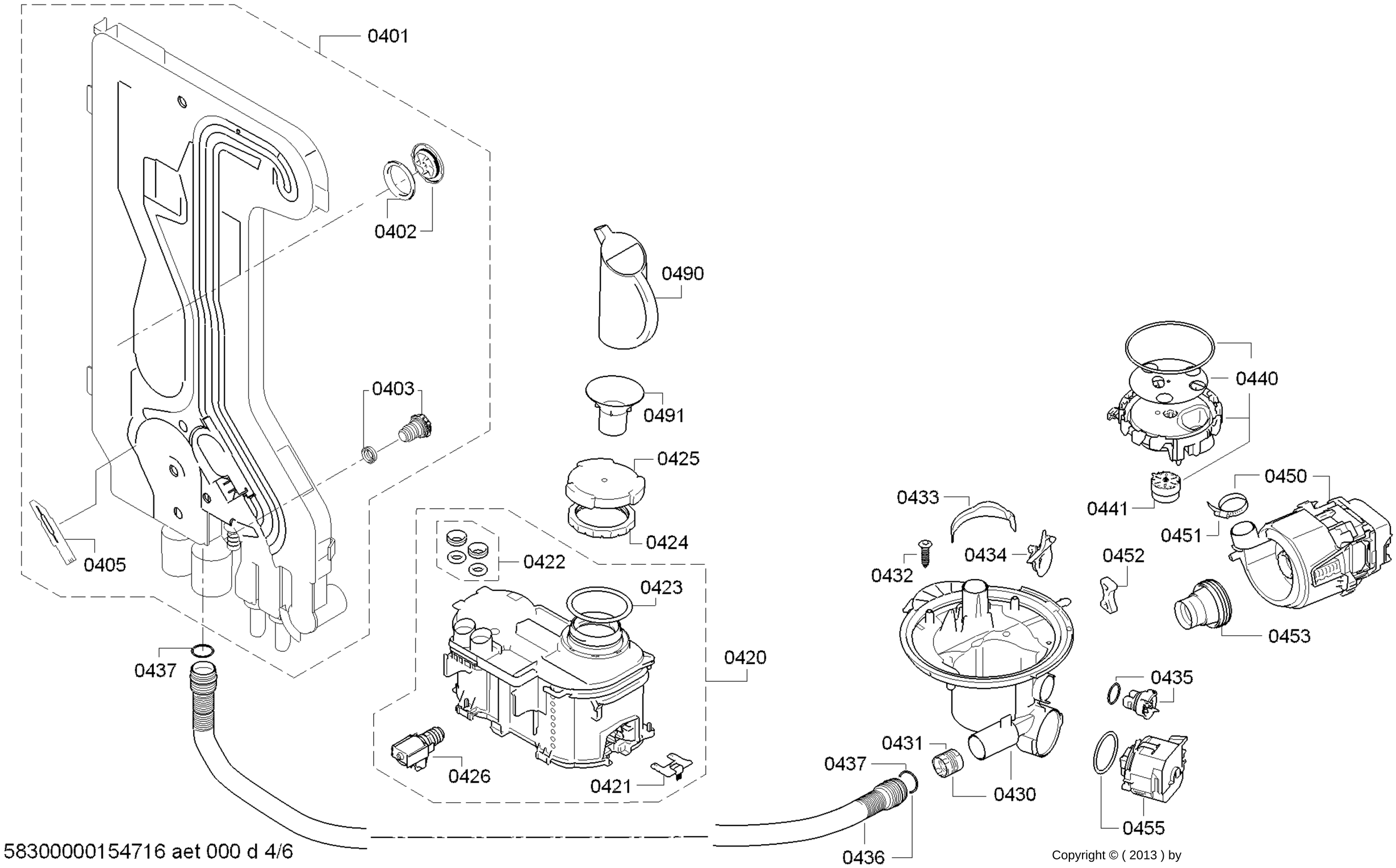

58300000154716 aet 000 d 4/6

Copyright © (2013) by

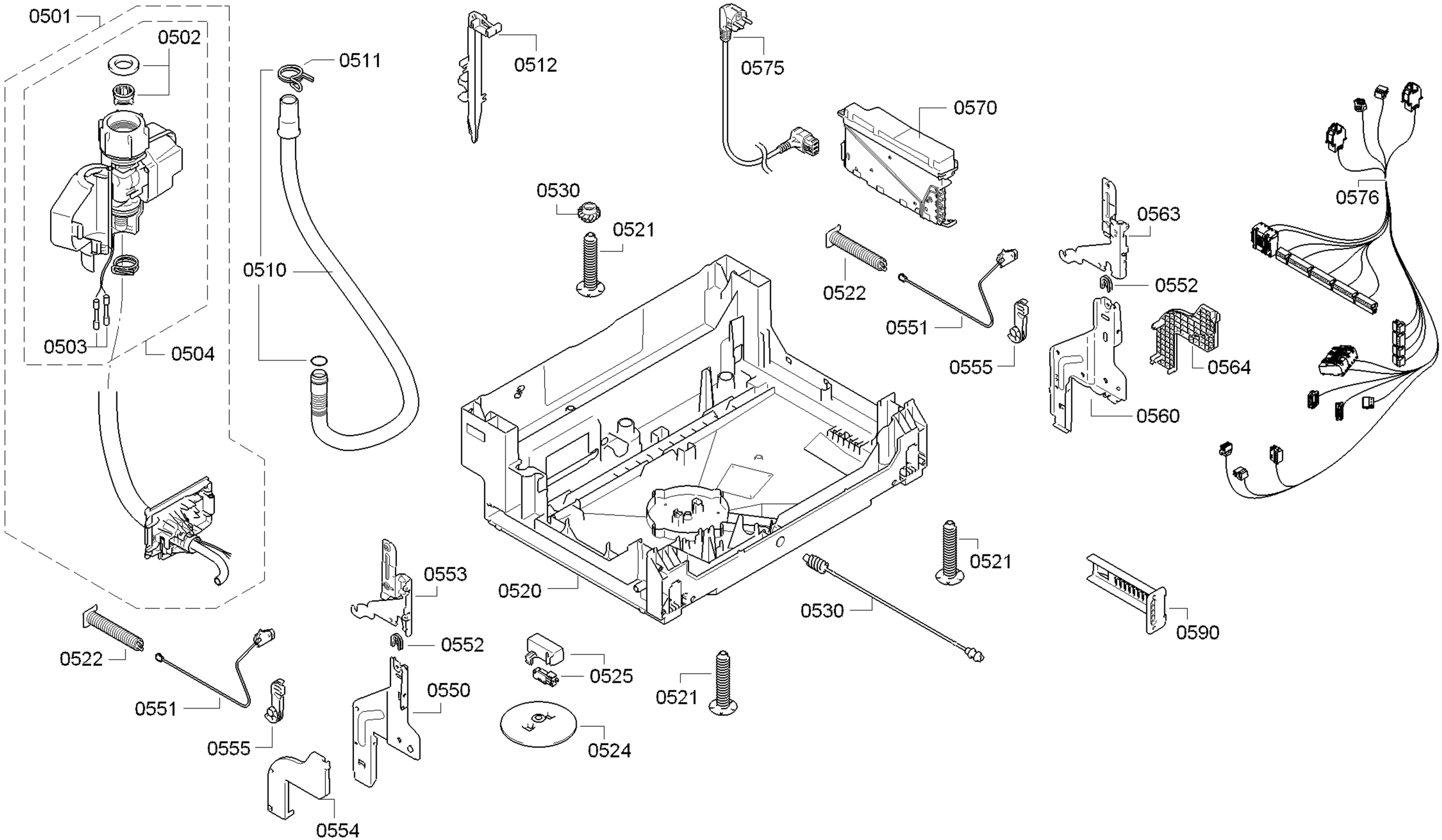

Copyright © (2013) by

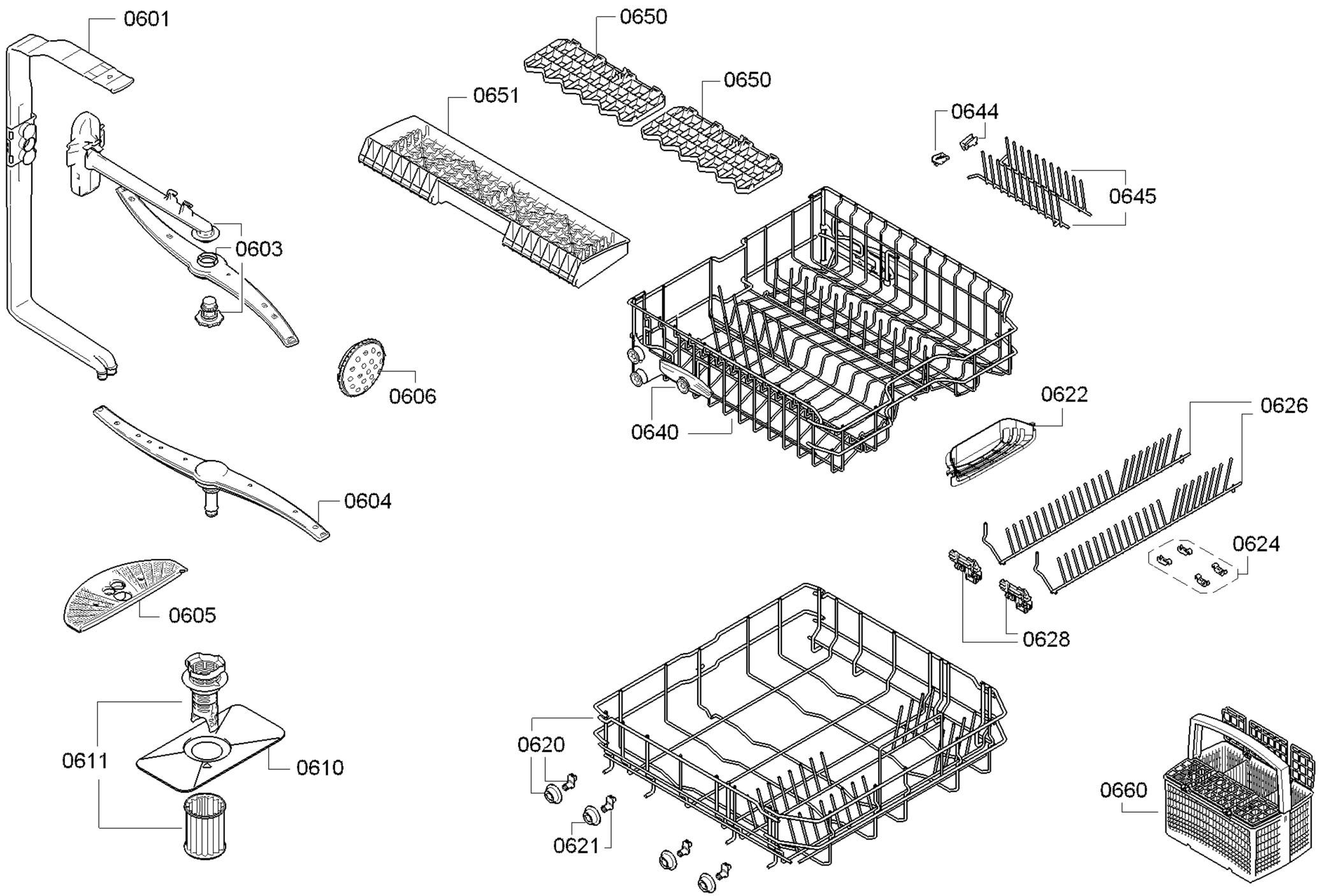

Copyright © (2013) by