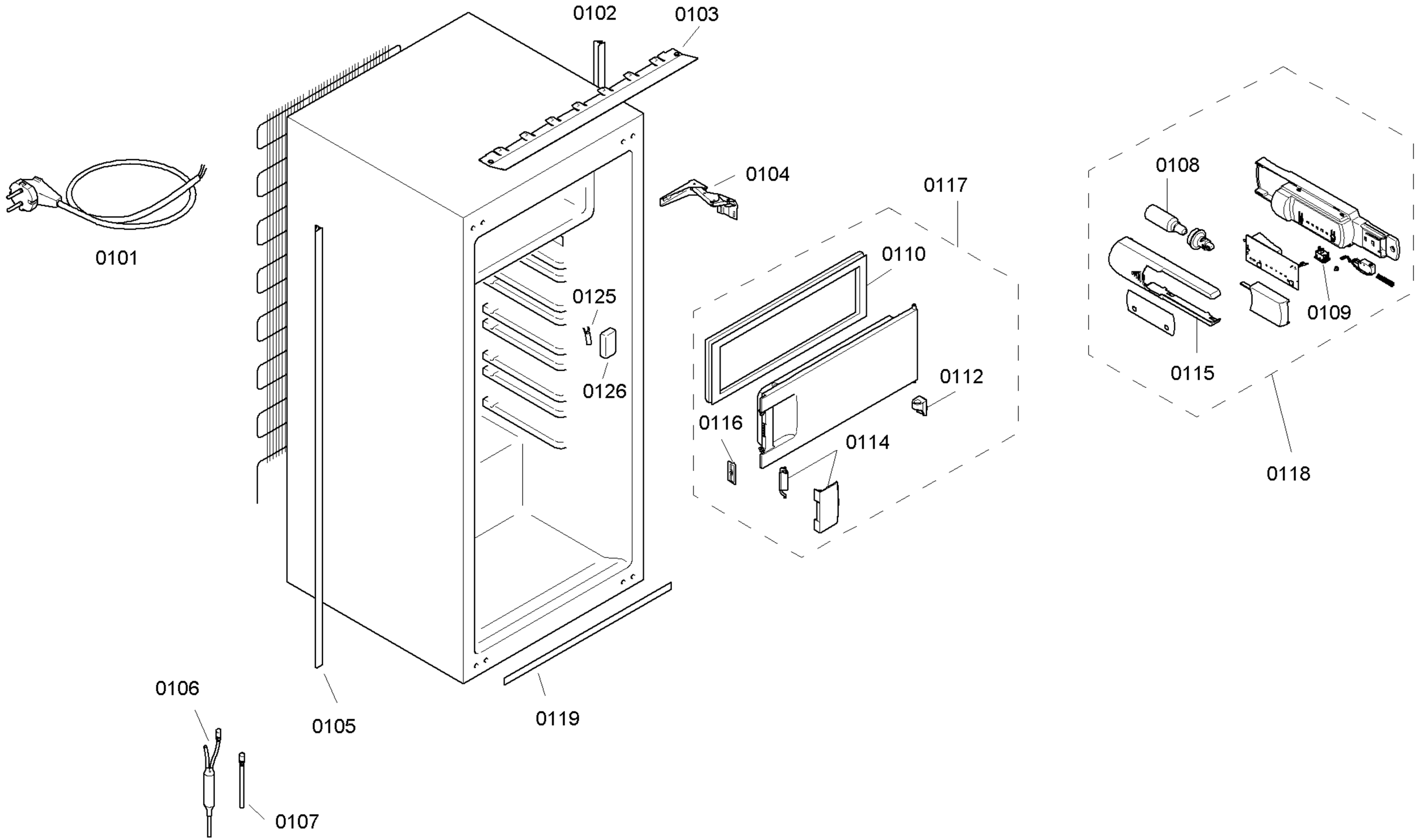

58300000114932 aet 000 g 1/3

Copyright © (2009) by Siemens / ESHOP_7_2

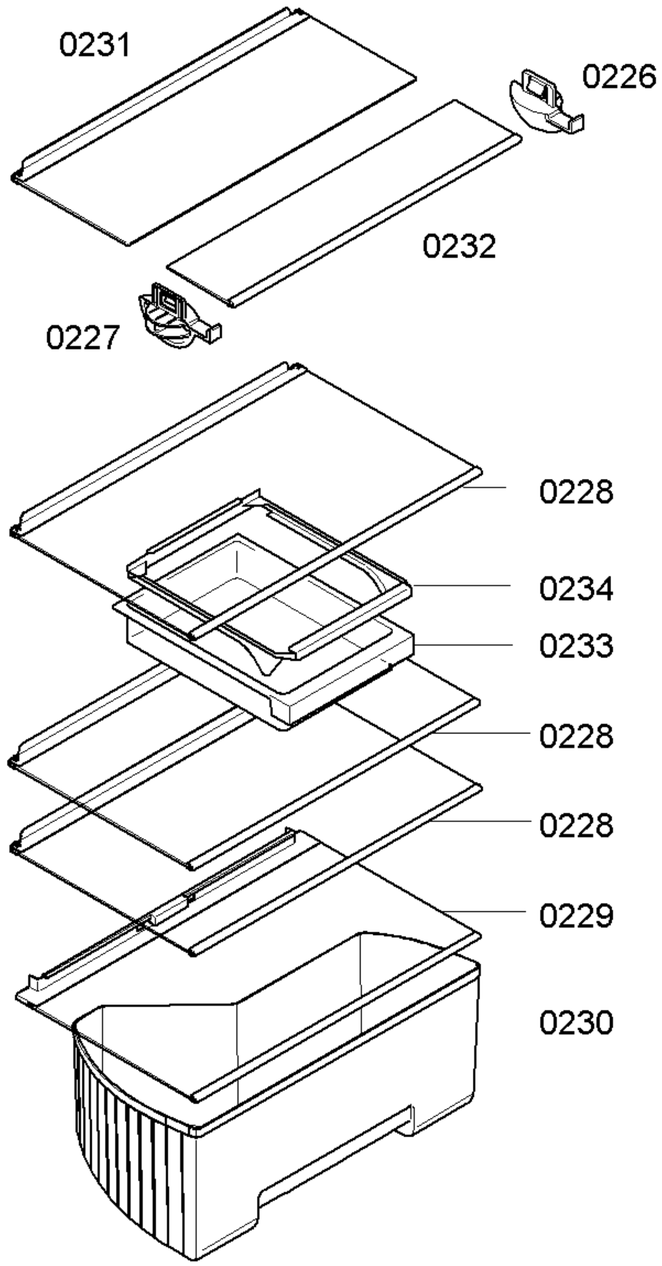

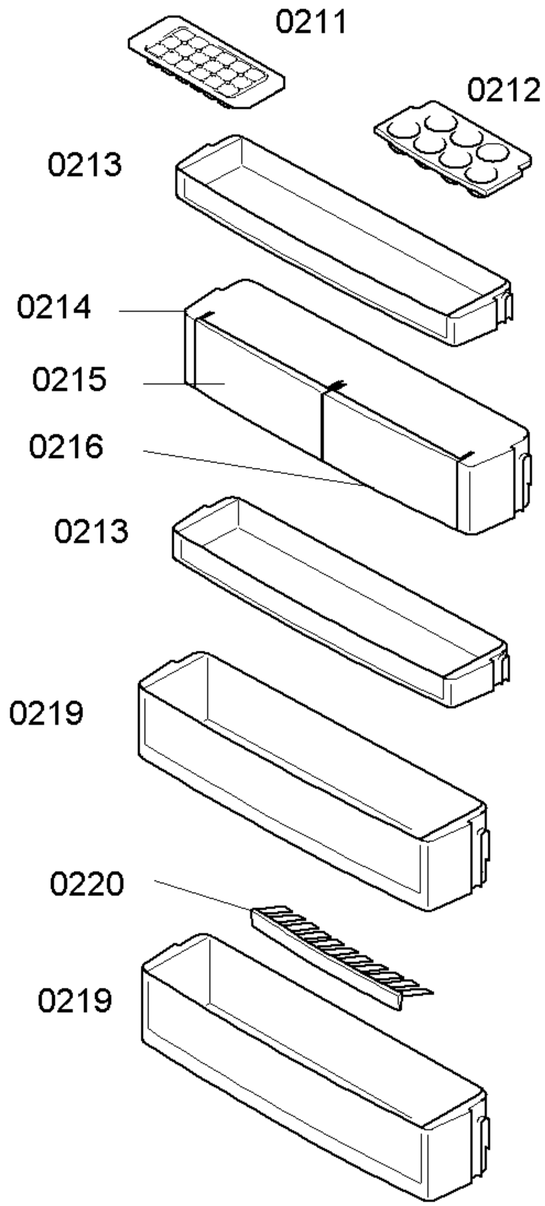

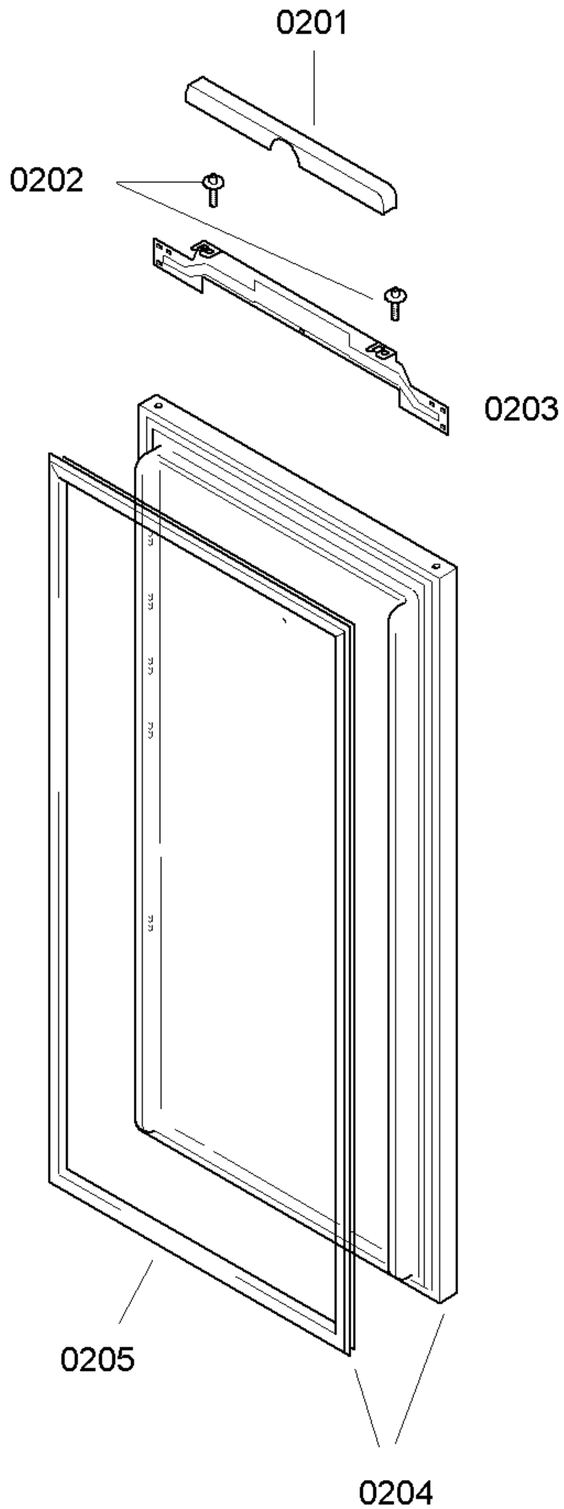

Copyright © (2009) by Siemens / ESHOP_7_2

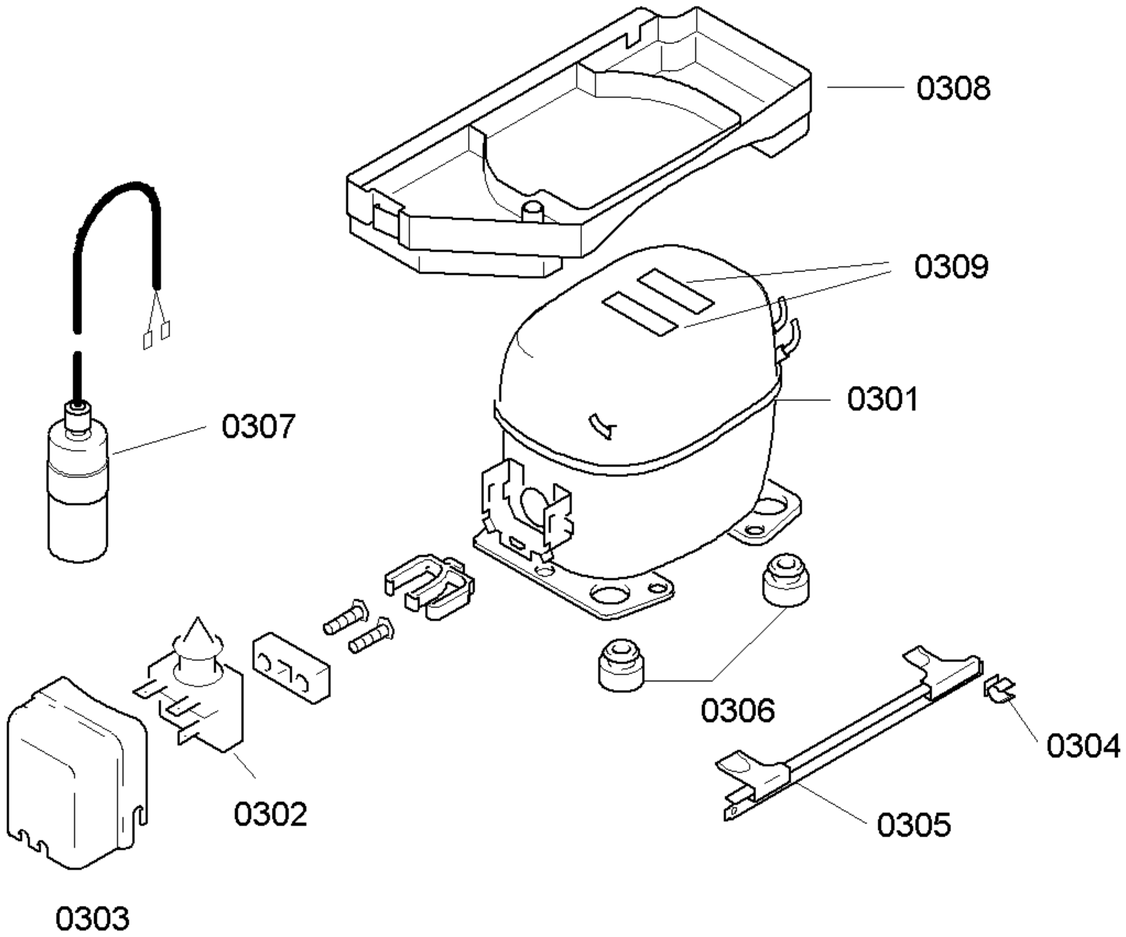

Copyright © (2009) by Siemens / ESHOP_7_2