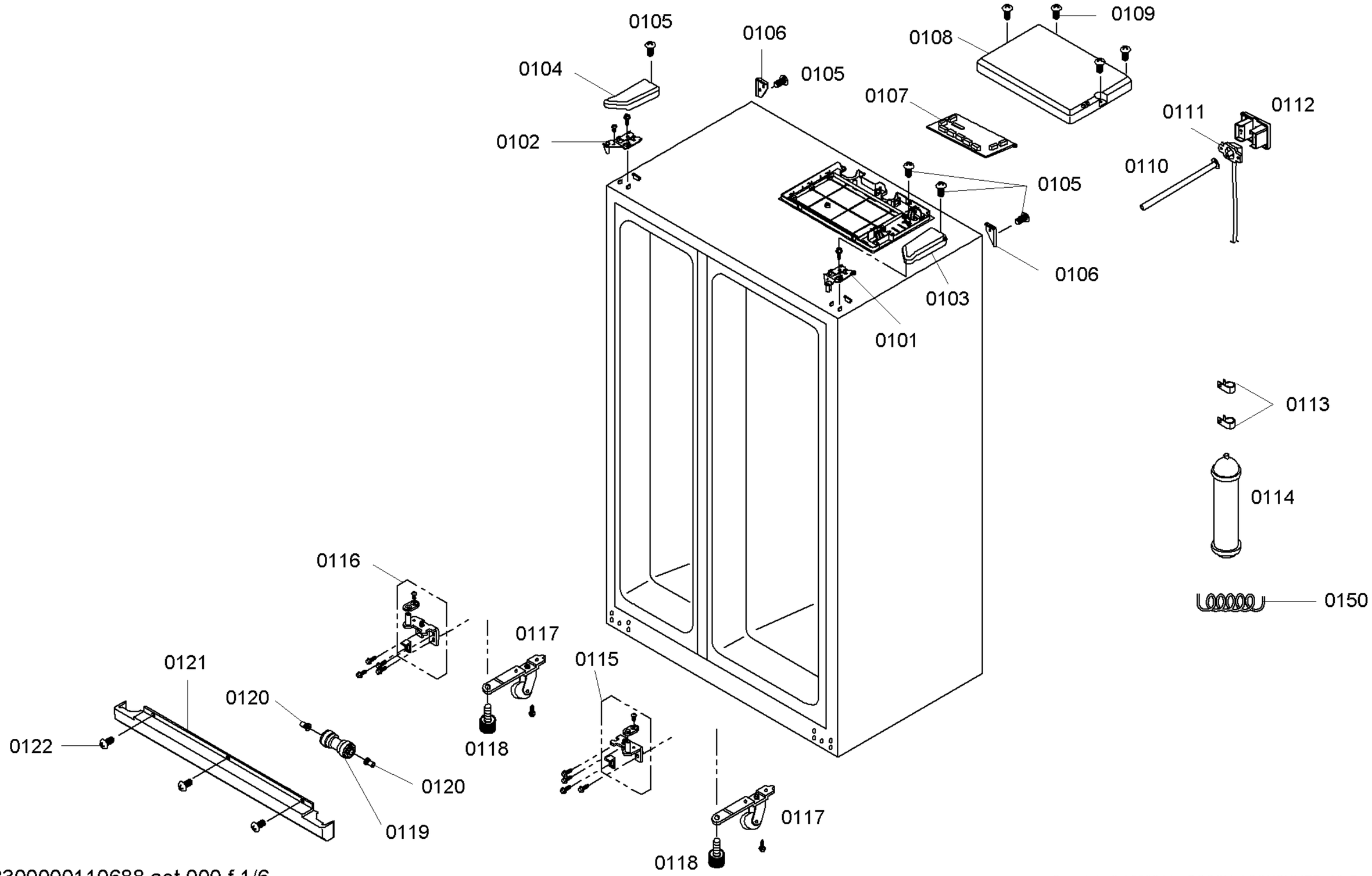

58300000110688 aet 000 f 1/6

Copyright © (2008) by BOSCH / CONSUMER_12_7

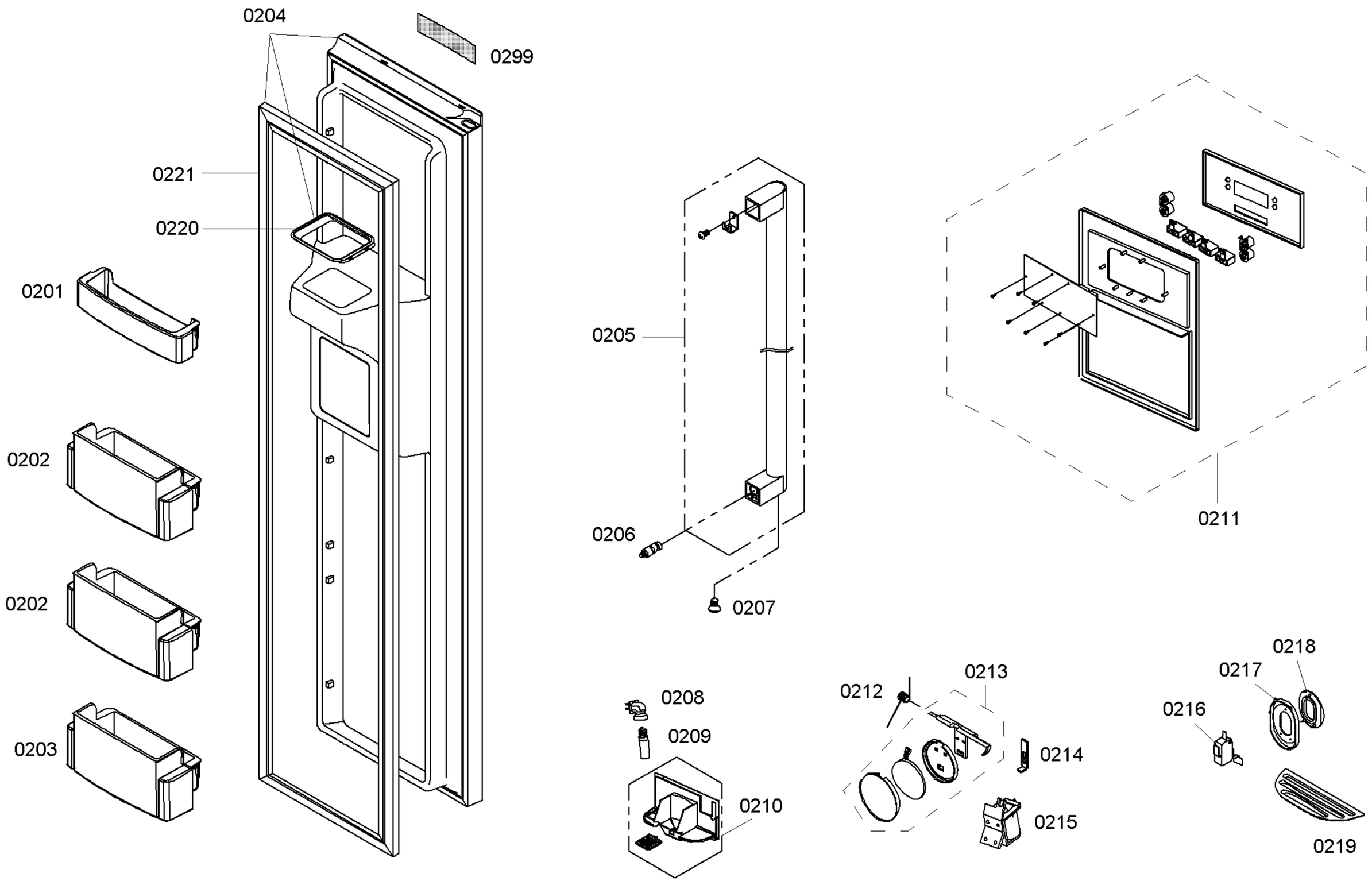

58300000110688 aet 000 f 2/6

Copyright © (2008) by BOSCH / CONSUMER_12_7

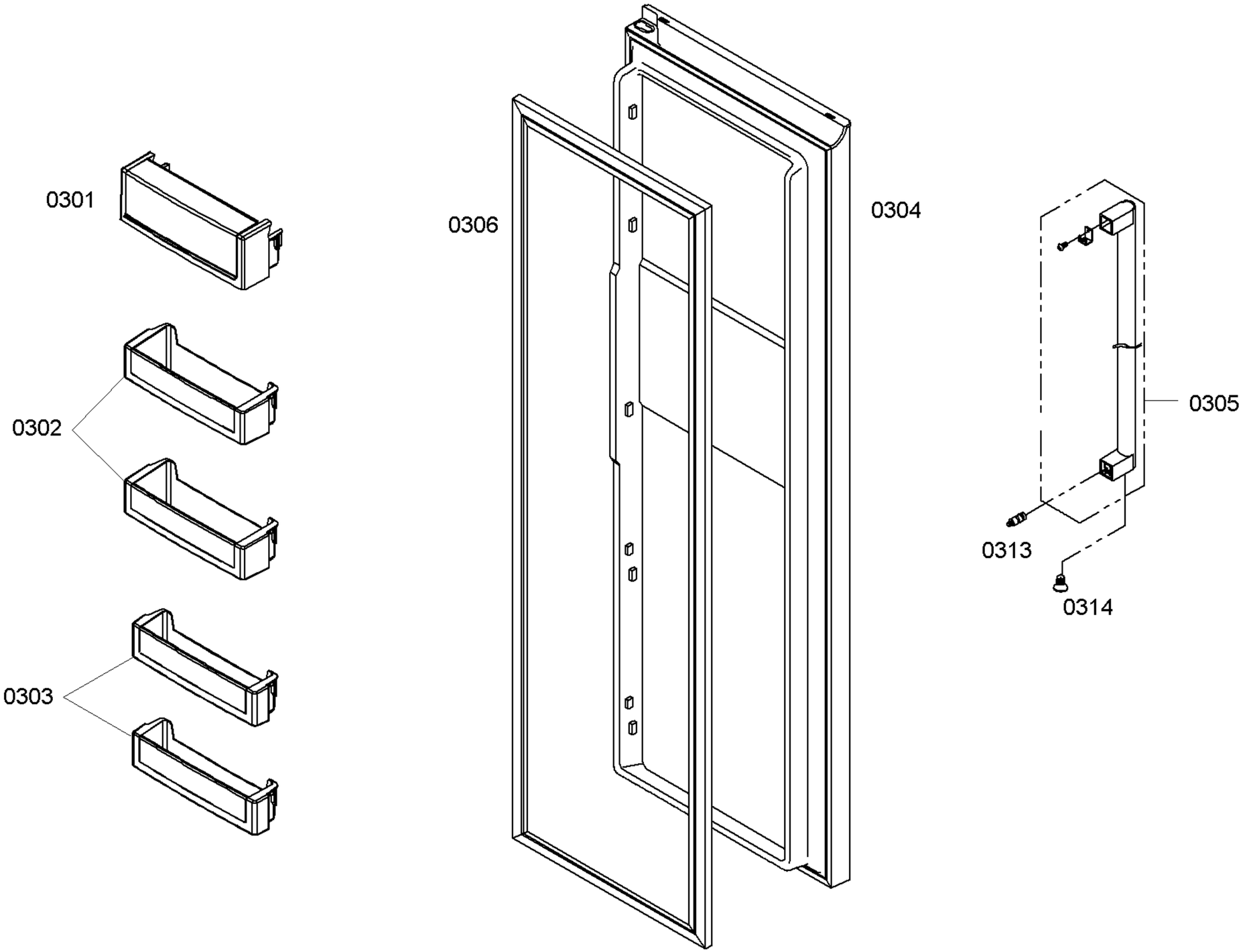

Copyright © (2008) by BOSCH / CONSUMER_12_7

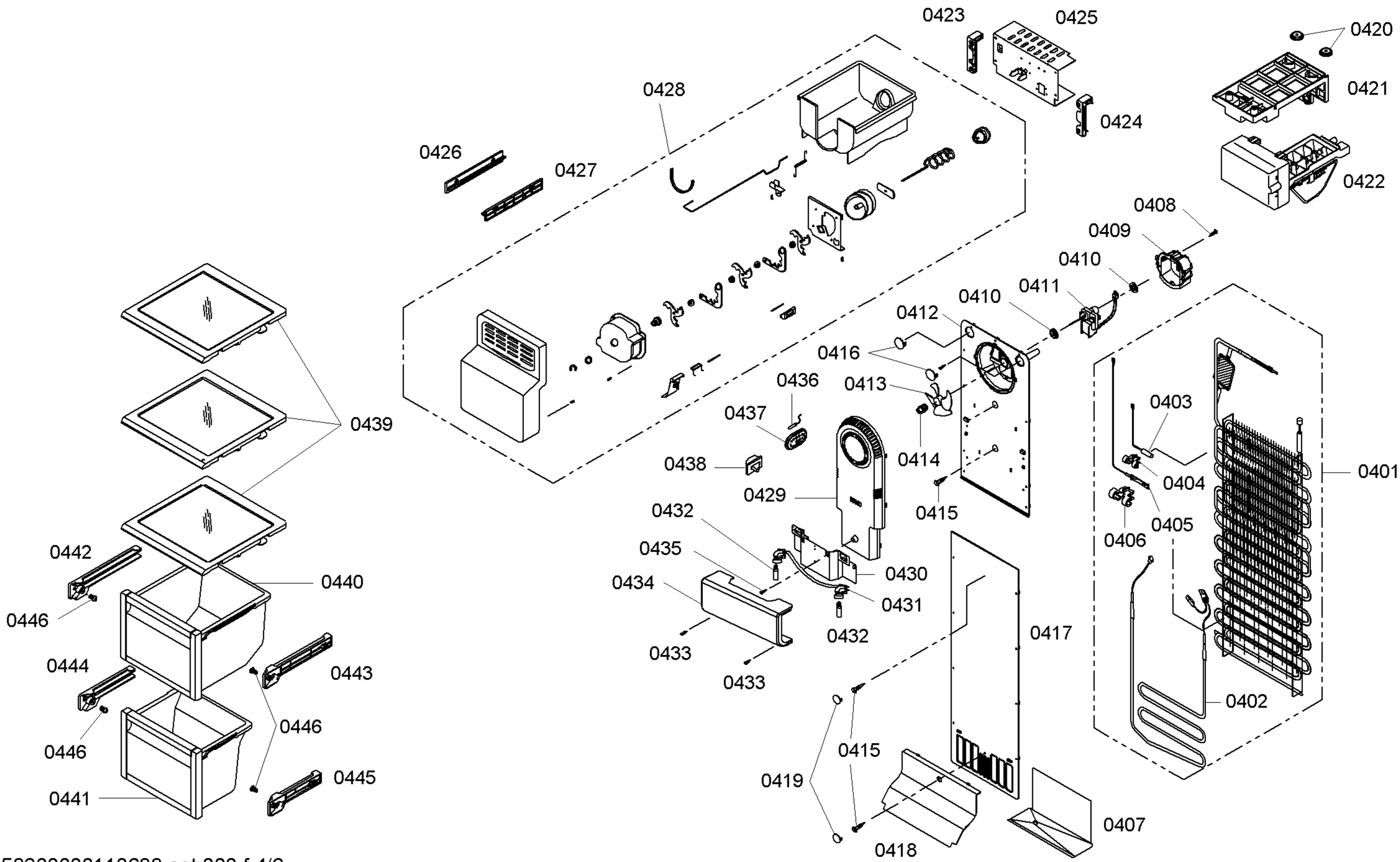

Copyright © (2008) by BOSCH / CONSUMER_12_7

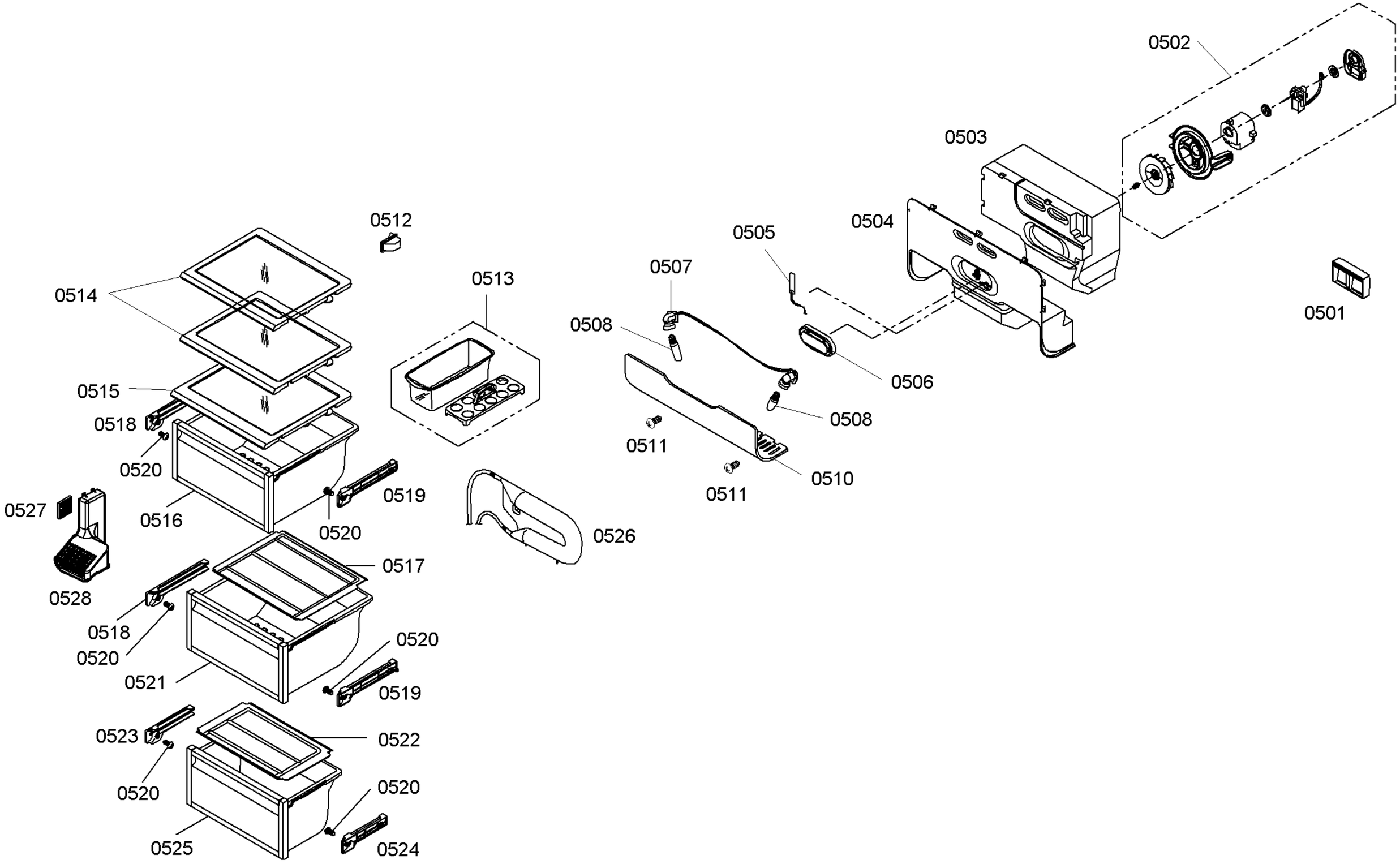

Copyright © (2008) by BOSCH / CONSUMER_12_7

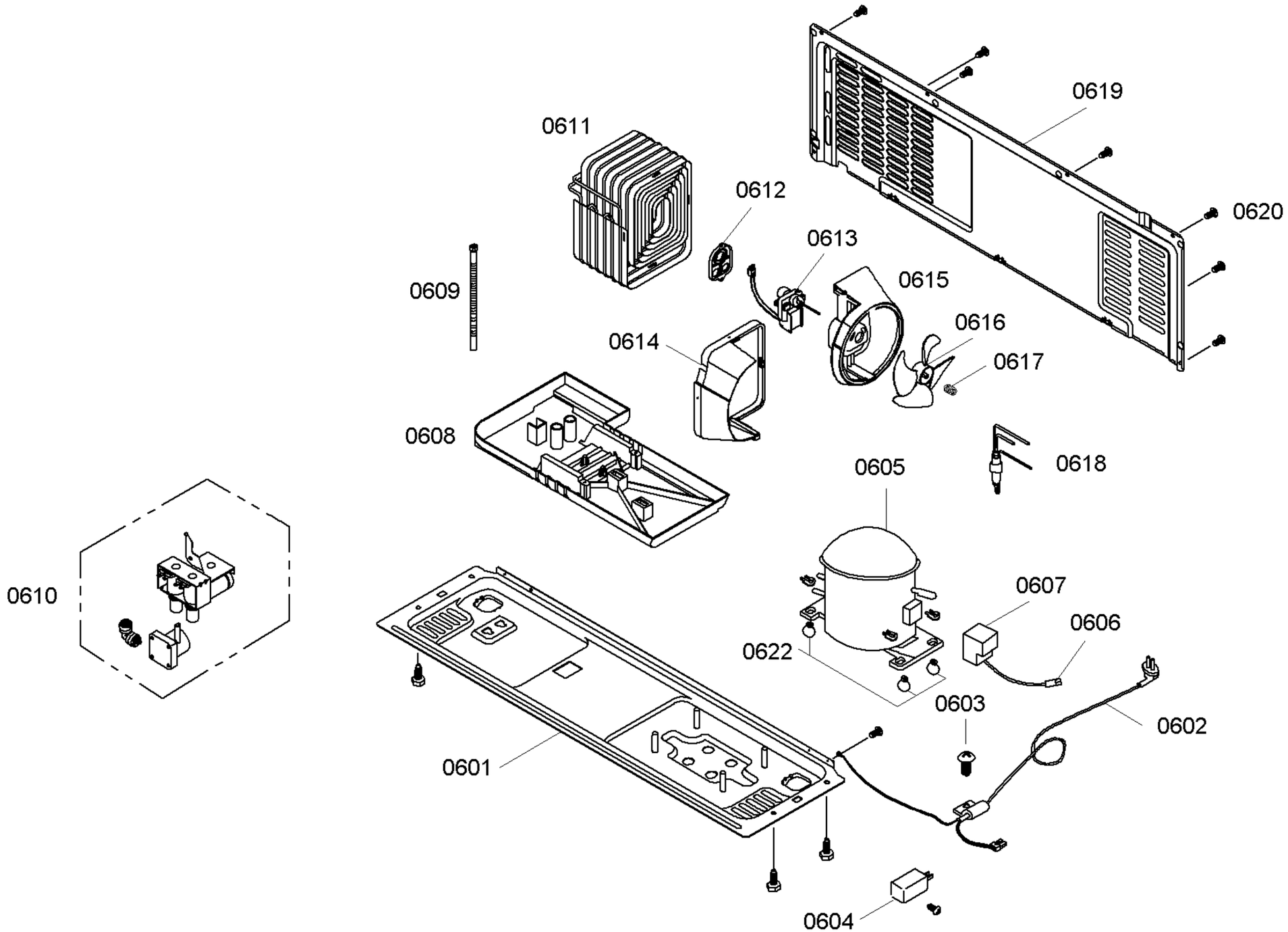

Copyright © (2008) by BOSCH / CONSUMER_12_7