8. EXPLODED VIEW

▼ The parts of refrigerator and the shape of each part are subject to change in different localities.
▼ Capacitors and fuse are optional parts.
▼ ★: Optional parts.

1) Freezer Shelf
   -Plastic : 149A
   -Steel : 136C, 136D
2) Ice Maker
   - Twist : 110B, 125A, 125H, 131A
   - Standard : 125J
3) Refrigerator Shelves
   - Plastic: 149C
   - Steel : 136A, 136B, 149D

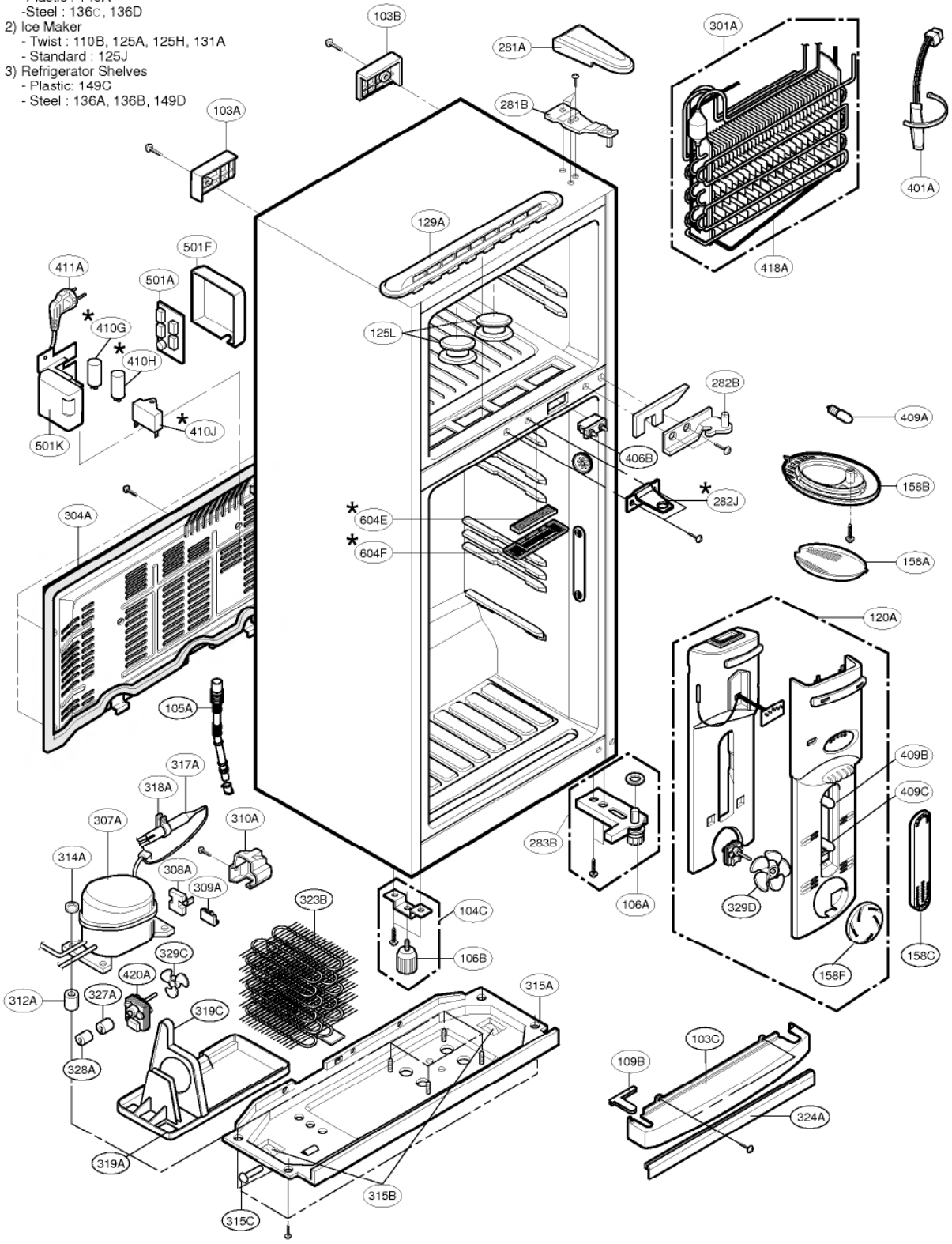

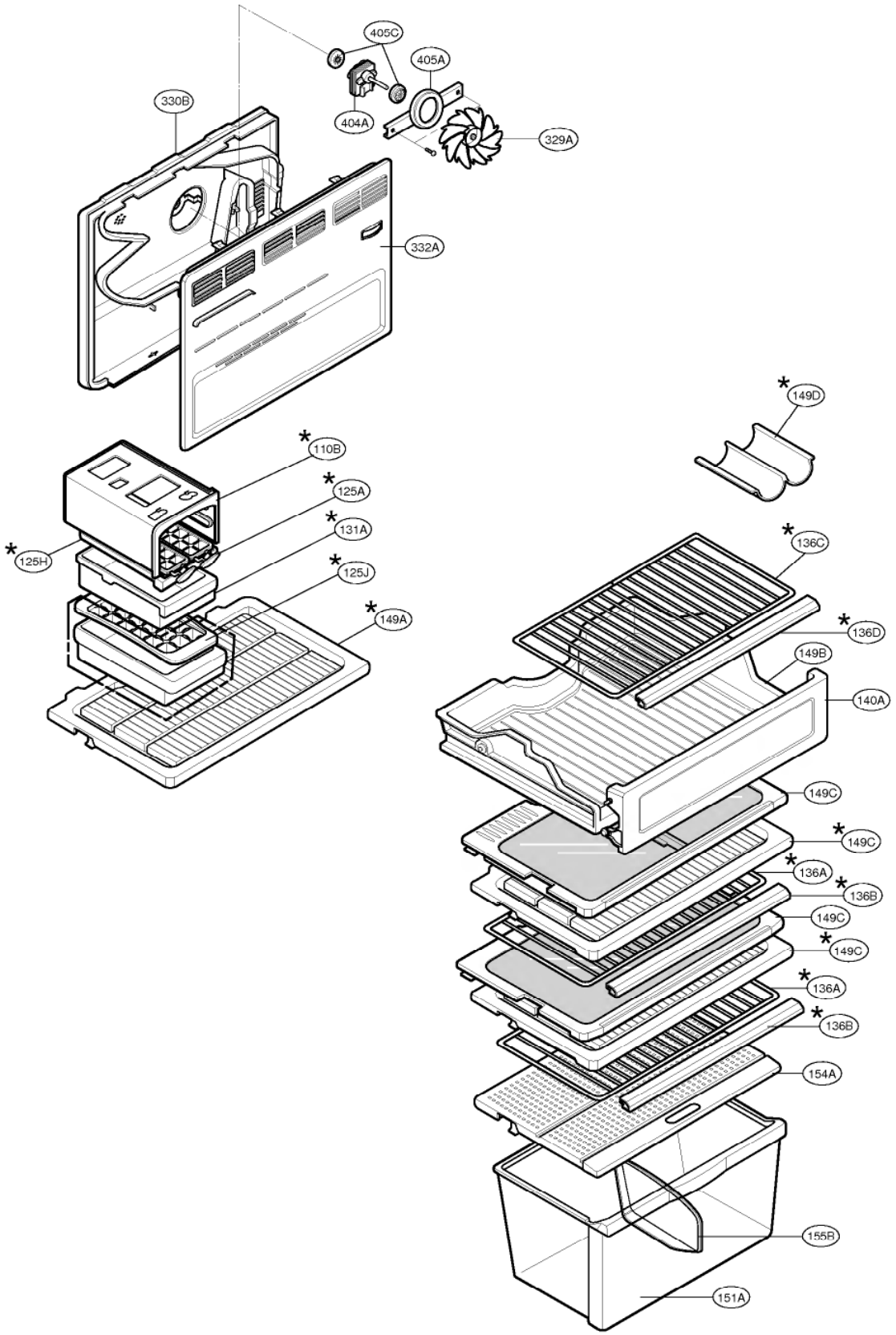
405C
405A
330B
404A
329A
332A
*149D
*110B
*125A
*131A
*125H
*125J
*149A
*136C
*136D
149B
140A
149C
*149C
*136A
*136B
149C
*149C
*136A
*136B
154A
155B
151A

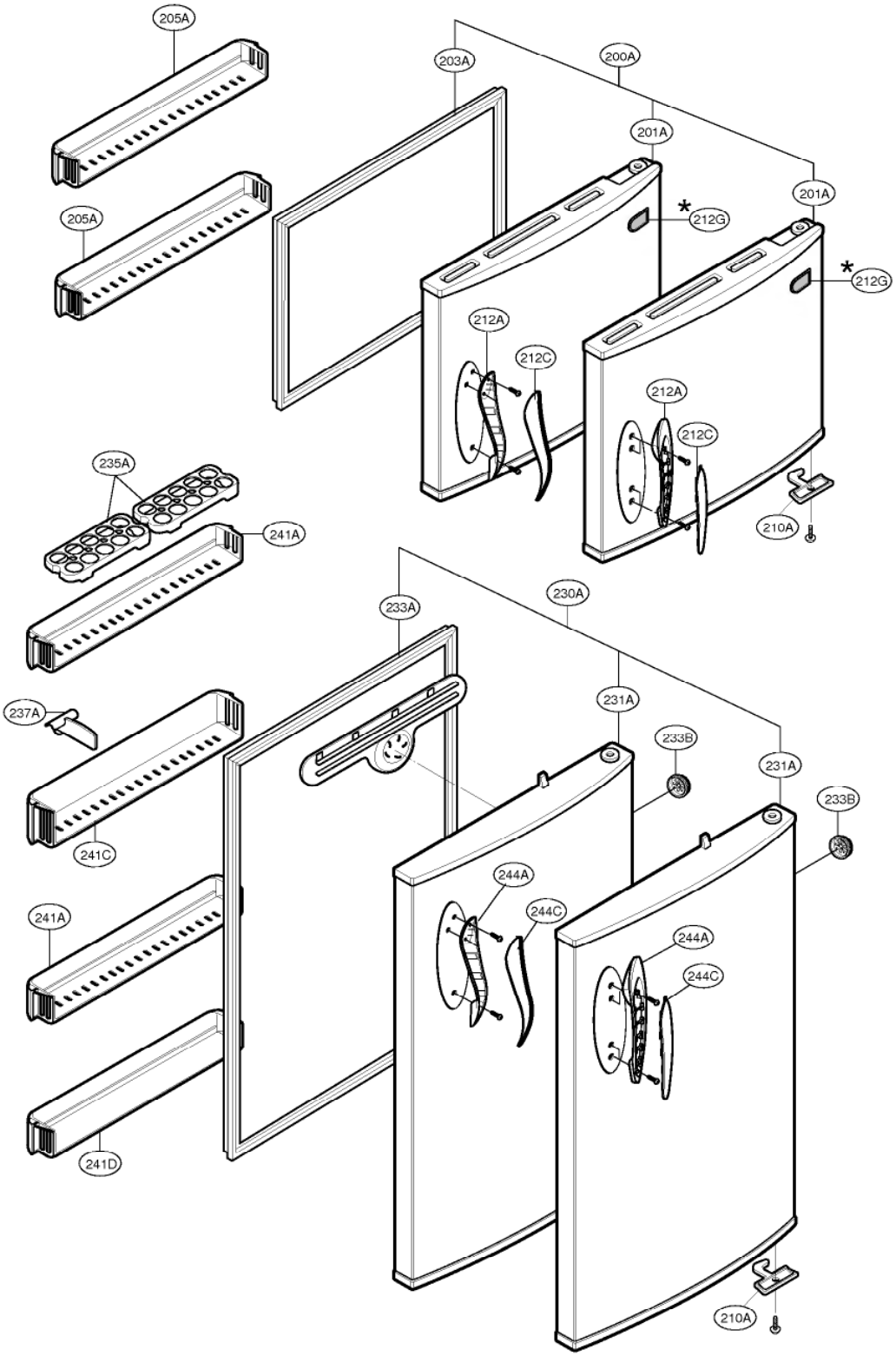
205A
205A
203A
200A
201A
201A
212G
212G
212A
212C
212A
212C
210A
235A
241A
233A
230A
237A
231A
233B
231A
233B
241C
244A
244C
241A
244A
244C
241D
210A