5.3 MECHANISM ASSEMBLY <M3>

BEWARE OF BOGUS PARTS

Parts that do not meet specifications may cause trouble in regard to safety and performance. We recommend that genuine JVC parts be used.

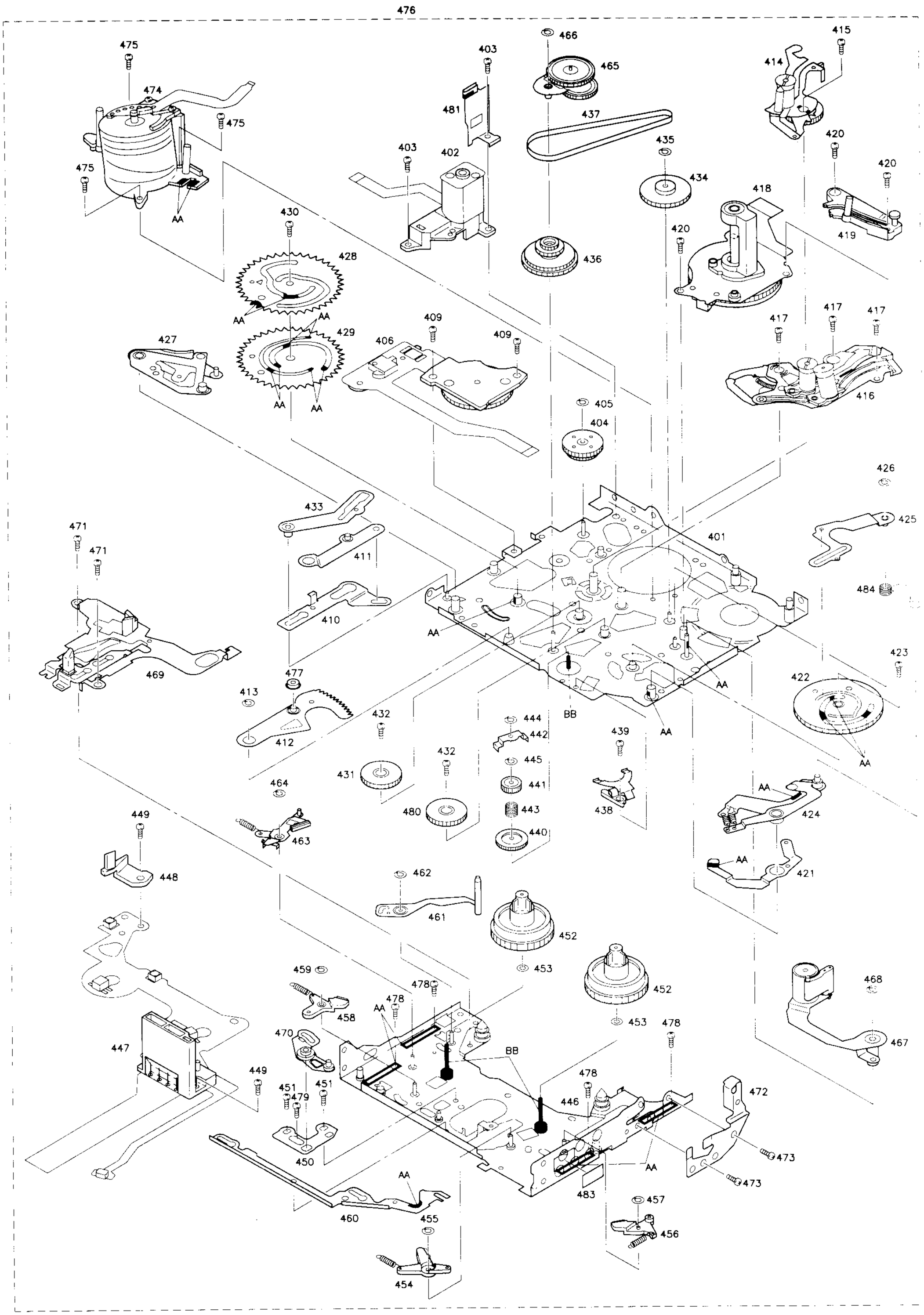

Classification	Part No.	Symbol in drawing
Grease	KYODO-SH-P	AA
Oil	YTU94027	BB

NOTE: The section marked in **AA** and **BB** indicate lubrication and greasing areas.